Stati Parties v. Republic of Kazakhstan

Review of the application of TNG and KPM funds by the Stati Parties

29 July 2020

Private and Confidential

pwc

Contents

Use of this report

This report has been prepared in accordance with the Letter of Engagement between PricewaterhouseCoopers LLP ("**PwC**") and Herbert Smith Freehills LLP ("**HSF**") dated 2 August 2019 and the Variation Letters dated 9 January 2020, 30 January 2020, 27 February 2020 and 25 June 2020. This report has been prepared only for HSF acting on behalf of the Ministry of Justice of the Republic of Kazakhstan and solely for the purpose and on the terms agreed in the Letter of Engagement. Neither Ian Clemmence nor PwC accepts any liability (including for negligence) to anyone else in connection with this report, and it may not be provided to anyone else except as stated in the engagement letter.

Use of this report

This report has been prepared in accordance with the Letter of Engagement between PricewaterhouseCoopers LLP ("**PwC**") and Herbert Smith Freehills LLP ("**HSF**") dated 2 August 2019 and the Variation Letters dated 9 January 2020, 30 January 2020, 27 February 2020 and 25 June 2020. This report has been prepared only for HSF acting on behalf of the Ministry of Justice of the Republic of Kazakhstan and solely for the purpose and on the terms agreed in the Letter of Engagement. Neither Ian Clemmence nor PwC accepts any liability (including for negligence) to anyone else in connection with this report, and it may not be provided to anyone else except as stated in the engagement letter.

Appendices

	Appendix
Curriculum Vitae of Ian Clemmence	1.1
List of documents relied upon	1.2
Sources of data used to identify potential related parties	4.1
Quantification of excess interest charged onto TNG and KPM by Tristan	4.2
Summary of payments to the Stati family	4.3
Net Petty Cash transactions recorded in TNG's and KPM's 1C Ledgers	4.4
Summary of cash payments between TNG, Perkwood, Azalia and Hayden	4.5
Summary of TNG's and KPM's sales of crude oil, gas condensate and gas	5.1
Net cash proceeds from sales of TNG's and KPM's crude oil and gas condensate to Vitol	5.2
Summary of non-disclosed related party transactions	6.1

Glossary of terms and abbreviations

Abbreviation	Term
1C	TNG and KPM used the accounting system referred to as "1C"
2006 Indenture	An Indenture that was entered into between Tristan, KPM and TNG with Wells Fargo Bank, N.A. as Trustee, on 20 December 2006
Ascom	Ascom S.A., 100% owner of KPM and registered in the Republic of Moldova,[1] is the claimant in the arbitration. This entity is also referred to as Ascom Group S.A. I am instructed that that until between 2004 and 2007, it was previously known as Industrial Financial Group Ascom SA, JSC Industrial Financial Group Ascom or IFG Ascom SA, and it was subsequently renamed to Ascom Group SA. This is not the same company as Ascom Group Limited, an entity registered in the British Virgin Islands.
Ascom Group Limited	According to Rietumu Bank statements the company is located in the BVI, entity controlled by the Stati Parties
Award or Awarded Amount	Award issued by the Tribunal of around USD 500 million against the Republic of Kazakhstan
Azalia or Azalija	Azalia LLC (alternative spelling "Azalija OOO"), entity controlled by the Stati Parties
Bbl	Barrels of crude oil and gas condensate
Cf	Cubic feet of natural gas
COMSA	Crude Oil Marketing Services Agreement
ECT Arbitration	Arbitral proceedings intitated by the Stati Parties against the Republic of Kazakhstan under the Energy Charter Treaty

[1] Tristan's Annual Report, Combined and Standalone audited Financial Statements of Tristan, KPM and TNG for the year ended 31 December 2009, page F-90, Note 1. Exhibit PwC-007.

Financial Statements	Financial statements of (1) Tristan; (2) KPM; and (3) TNG from at least 2007 to 2009 that the Republic of Kazakhstan alleges to be materially falsified by Stati Parties
General Affinity	General Affinity Ltd, related party vehicle used for sales of crude oil and gas condensate
Getter	Getter Investment Limited, related party, according to Rietumu Bank statements the company is located in British Virgin Islands at the same address as Melvin Production Inc, entity controlled by the Stati Parties
Hayden	Hayden Intervest Ltd, related party, according to Rietumu Bank statements the company is located in British Virgin Islands, entity controlled by the Stati Parties
HSF	Herbert Smith Freehills LLP
KPM	Kazpolmunay LLP
KPMG	KPMG Audit LLC
KPMG Correspondence	Certain correspondence between the Stati Parties and KPMG
KZT	Kazakhstan tenge, currency of the Republic of Kazakhstan
LPG Plant	Liquefied petroleum gas plant
Majority Noteholders	Certain number of the Noteholders that entered into a Sharing Agreement with Stari Parties, as well as Tristan, on 17 December 2012
Modified Tristan Notes	New type of Tristan Notes created through Sharing Agreement
Montvale	Montvale Invest Ltd
Melvin	Melvin Production Inc, related party, according to Rietumu Bank statements the company is located in British Virgin Islands at the same address as Getter Investment Limited, entity controlled by the Stati Parties
Mr A Stati	Anatolie Stati
Mr G Stati	Gabriel Stati
Noteholders	Holders of Tristan Notes (financial institutions)
Perkwood	Perkwood Investments Ltd, entity controlled by the Stati Parties

Perkwood SPA	Sales and Purchase Agreement No. 01/01_TNG_PRK between TNG and Perkwood dated 17 February 2006
Prima Facie Fraud Judgement	The English High Court made a conclusion on 6 June 2017 that "*there is a sufficient prima facie case that the Award was obtained by fraud*"[2]
Proceeds	Any amounts collected by the Stati Parties, including Tristan, through the ECT Arbitration proceeding by the Stati Parties Against the Republic of Kazakhstan as set out in the Sharing Agreement
PwC	PricewaterhouseCoopers LLP
Romneftegaz	Romneftegaz LLC
Sharing Agreement	On 17 December 2012, the Stati parties, as well as Tristan, on the one side, and a certain number of Tristan Noteholders entered into Sharing Agreement and Assignment of Rights
Stadoil	Stadoil Ltd, related party vehicle used for sales of crude oil and gas condensate
Stati Parties	Anatolie Stati, Gabriel Stati, Ascom Group S.A. and Terra Raf Trans Traiding Ltd.
Terra Raf	Terra Raf Trans Traiding Ltd, 100% owner of TNG
TGE	Tractebel Gas Engineering GmbH
TGE Equipment	LPG equipment acquired from a German third party manufacturer and supplier, TGE
TNG	Tolkynneftegaz LLP
Tribunal	Arbitral tribunal in the ECT Arbitration
Tristan Notes	Under 2006 Indenture[3] and its amendments dated 21 May 2007[4] and 6 June 2007,[5] Tristan issued notes in the aggregate principal amount

[2] Judgement of Mr Justice Knowles CBE in the High Court of Justice dated 6 June 2017, Case No CL-2014-000070 between the Stati Parties and Kazakhstan, paragraph 92. Exhibit PwC-012

[3] Indenture entered between Tristan, KPM and TNG with Wells Fargo Bank, N.A. as Trustee dated 20 December 2006 (also referred to as "2006 Indenture"). Exhibit PwC-009.

[4] First Amendment to Indenture among Tristan, KPM, TNG and Wells Fargo Bank, N.A. Exhibit PwC-002.

[5] Second Amendment to Indenture among Tristan, KPM, TNG and Wells Fargo Bank, N.A. Exhibit PwC-003.

	of USD 300 million on or about 20 December 2006[6] and notes in the aggregate principal amount of USD 120 million on 8 June 2007[7]
Tristan	Tristan Oil Ltd (also referred to as Tristan Oil Limited), which is wholly-owned by Mr A Stati
Vitol	Vitol S.A., third party, purchased KPM's and TNG's crude oil and gas condensate. Vitol nominees-Arkham S.A. and Vitol FSU.
Wells Fargo	Wells Fargo Bank, N.A.

[6] Combined and Standalone audited Financial Statements of Tristan, KPM and TNG for the year ended 31 December 2006, page F-45, Note 8. Exhibit PwC-004.

[7] Tristan's Annual Report, Combined and Standalone audited Financial Statements of Tristan, KPM and TNG for the year ended 31 December 2007, page F-64, Note 15. Exhibit PwC-005.

1. Introduction

Introduction

1.1 My full name is Ian John Clemmence. I am a Partner in the London office of the United Kingdom firm of PricewaterhouseCoopers LLP ("**PwC**"). My qualifications and experience are set out in Appendix 1.1.

1.2 This report has been prepared in accordance with the terms of engagement dated 2 August 2019 (and the related Variation Letters dated 9 January 2020, 30 January 2020, 27 February 2020 and 25 June 2020) between PwC and Herbert Smith Freehills LLP ("**HSF**"). As explained further below, HSF represents the Republic of Kazakhstan (represented by the Ministry of Justice of the Republic of Kazakhstan) in a series of legal proceedings related to a dispute between Anatolie Stati ("**Mr A Stati**"), Gabriel Stati ("**Mr G Stati**"), Ascom Group S.A. ("**Ascom**") and Terra Raf Trans Traiding Ltd. ("**Terra Raf**") (referred to as the "**Stati Parties**"); and the Republic of Kazakhstan, under the Energy Charter Treaty (the "**ECT Arbitration**"). The dispute relates to the Stati Parties' alleged investment in Kazakhstan through Kazakhstan-based companies Tolkynneftegaz LLP ("**TNG**") and Kazpolmunay LLP ("**KPM**"). Amongst other things, TNG was involved in the construction of a liquefied petroleum gas plant ("**LPG Plant**") in Kazakhstan.

1.3 Under the terms of PwC's instructions from HSF, I have been instructed to review the original loan note financing that was put in place for TNG and KPM, in order to fund the construction of the LPG Plant, as well as various sources of financial information related to TNG and KPM (as well as a number of related parties). I have then also been instructed to consider whether there is evidence, in the information provided to me, that funds were diverted away from TNG and KPM by the Stati Parties (and / or other related parties). Further details of my instructions and the scope of my work are set out below.

1.4 This report has been prepared only for HSF acting on behalf of the Ministry of Justice of the Republic of Kazakhstan and solely for the purpose and on the terms of our engagement. Neither I nor PwC accepts any liability (including for negligence) to anyone else in connection with this report, and it may not be provided to anyone else except as stated in the engagement letter. I understand that HSF will share this report with the parties to the current litigation being undertaken in respect of this. I consent to this report being provided to those parties for the purpose of conducting the current litigation proceedings. However, save for HSF, I accept or assume no liability to the any other party as a consequence of them being provided with this report.

1.5 I have been assisted in my work by members of my firm's staff and PwC Kazakhstan, whose work I have supervised personally. The opinions expressed in this report are my own.

1.6 I am instructed to act as an accounting expert witness and not as a witness of fact.

Background

1.7 I understand that the background to this matter is set out in a number of documents which have already been submitted in these proceedings. I have therefore not repeated that background in detail in this report. However, certain areas of background which are relevant to my report are set out below.

1.8 I am instructed that the Stati Parties raised finance for their alleged investment in Kazakhstan, from investors, through a company called Tristan Oil Limited ("**Tristan**"), which is wholly-owned by Mr A Stati. Included in the finances raised by the Stati Parties was an Indenture that was entered into between Tristan, KPM and TNG with Wells Fargo Bank, N.A. ("**Wells Fargo**") as Trustee, on 20 December 2006 (the "**2006 Indenture**")[8]. I understand that the purpose of the 2006 Indenture was to finance the operations of KPM and TNG in Kazakhstan, including the LPG Plant.[9]

1.9 I understand that pursuant to the 2006 Indenture and its amendments dated 21 May 2007[10] and 6 June 2007[11], Tristan issued notes in the aggregate principal amount of USD 300 million on or about 20 December 2006[12] and notes in the aggregate principal amount of USD 120 million on 8 June 2007[13] (together, the "**Tristan Notes**"). I understand that these notes were purchased by a range of financial institutions (the "**Noteholders**"). I set out further details on the Tristan Notes in Section 3 of this report.

1.10 As set out above, the current legal proceedings between the Stati Parties and the Republic of Kazakhstan relate to the Stati Parties alleged investments, including the funds raised from the Tristan Notes, through KPM and TNG in Kazakhstan.

---

[8] 2006 Indenture, Exhibit PwC-009.

[9] See Section 3 for further details.

[10] First Amendment to Indenture among Tristan, KPM, TNG and Wells Fargo Bank, N.A. Exhibit PwC-002.

[11] Second Amendment to Indenture among Tristan, KPM, TNG and Wells Fargo Bank, N.A. Exhibit PwC-003.

[12] Combined and Standalone audited Financial Statements of Tristan, KPM and TNG for the year ended 31 December 2006, page F-45, Note 8. Exhibit PwC-004.

[13] Tristan's Annual Report, Combined and Standalone audited Financial Statements of Tristan, KPM and TNG for the year ended 31 December 2007, page F-64, Note 15. Exhibit PwC-005.

1.11 I understand that on 19 December 2013, the Stati Parties obtained an award issued by the arbitral tribunal in the ECT Arbitration (the "**Tribunal**") of around USD 500 million against the Republic of Kazakhstan (the "**Award**" and the "**Awarded Amount**")[14]. I understand that the Awarded Amount was based, in respect of the value of the LPG Plant, on an indicative bid which had been submitted for that plant.[15] This indicative bid was based on a combination of TNG's historical costs allegedly spent on the LPG Plant[16] and the available financial statements of TNG and KPM[17] . After the date of the Award, I understand that the Republic of Kazakhstan initiated annulment proceedings in the Svea Court of Appeals in Stockholm, at the seat of the ECT Arbitration. During the course of the annulment proceedings, the Republic of Kazakhstan alleges that a new set of facts was discovered that showed that the Award and the Awarded Amount had been fraudulently obtained.

1.12 In parallel to the annulment proceedings in Sweden, I understand that the Stati Parties commenced proceedings for enforcement of the Award in the United Kingdom, where following an exchange of written and oral submissions in a two day hearing, on 6 June 2017 the English High Court decided that "*there is a sufficient prima facie case that the Award was obtained by fraud*" (the "**Prima Facie Fraud Judgement**").[18] The Prima Facie Fraud Judgement is attached as PwC-012.

Scope of work

1.13 As set out above, I have been instructed to review the Tristan Notes and other relevant financial information provided to me and to specifically consider the following:

a. Whether there is evidence that the proceeds from the Tristan Notes, and the funds generated by TNG and KPM from their operations, were used for purposes other than for those of KPM's and

[14] Award issued by the Tribunal in the ECT Arbitration dated 19 December 2013. Exhibit PwC-001.

[15] Award issued by the Tribunal in the ECT Arbitration dated 19 December 2013, Paragraph 1747, page 382. Exhibit PwC-001.

[16] KazMunaiGas Exploration Production JSC Indicative Bid, dated 25 September 2008, points d and f. Exhibit PwC-010.

[17] The Information Memorandum on Project Zenith, issued by Renaissance Capital, in August 2008. The following financial information is referred to on page 4, Exhibit PwC-011: "*The financial information presented in this Information Memorandum is derived from the unaudited interim combined balance sheets and statements of income, cash flows and changes in shareholders' equity of KPM, TNG and Tristan Oil, as of and for the six months ended 30 June 2007 and 2008, and the audited combined balance sheets and statements of income, cash flows and changes in shareholders' equity of KPM, TNG and, with effect from its incorporation on 24 October 2006 and Tristan Oil, as of 31 December 2005, 2006 and 2007. In addition, financial information presented in this Information Memorandum is derived from the individual interim unaudited balance sheets and statements of income, cash flows and changes in shareholders' equity of KPM, TNG and, Tristan Oil, as of and for the six months ended 30 June 2007 and 2008, and the audited individual balance sheets and statements of income, cash flows and changes in shareholders' equity of KPM, TNG and, with effect from its incorporation on 24 October 2006, Tristan Oil for the years ended 31 December 2005, 2006 and 2007 KPM and TNG are in the process of restating their financials for the years ended 31 December 2005 and 2006 and Tristan Oil, with effect from its incorporation on 24 October 2006, for the year ended 31 December 2006.*" The source of the information relied upon in the Information Memorandum is confirmed in the Witness Statement of Nuran Bakhytovich Kairakbayev, a copy of which is included in Exhibit PwC-100.

[18] Judgement of Mr Justice Knowles CBE in the High Court of Justice dated 6 June 2017, Case No CL-2014-000070 between the Stati Parties and Kazakhstan, paragraph 92. Exhibit PwC-012.

TNG's investments and operations in Kazakhstan and, in particular, in relation to the LPG Plant. I do this in Section 4 of this report.

b. Whether there is evidence that sales proceeds due to KPM and TNG from the sale of oil and gas products produced in Kazakhstan were diverted away from KPM and TNG by the Stati Parties. I do this in Section 5 of this report.

c. Whether there is evidence that the requirements of the 2006 Indenture and the Tristan Notes in relation to financial reporting and related party transactions were breached by the Stati Parties. I do this in Section 6 of this report.

Documents relied upon

1.14 In preparing this report I have examined and relied upon various documents provided to me by HSF, including the following key categories of documents:

a. Financial statements for the years ended 31 December 2006, 2007, 2008 and 2009 (and various other interim financial statements over this period) for TNG, KPM and certain other relevant entities.

b. The underlying accounting records of KPM and TNG for the period from 1 January 2007 to 31 December 2009.

c. Various bank statements provided to me in relation to accounts held at Rietumu Bank, Riga, Latvia for a number of entities relevant to the scope of my work.[19]

1.15 I attach at Appendix 1.2 a list of the documents that I have relied upon in forming my expert opinion. Where I have relied upon specific documents in my work, I have also included references to those documents in this report and the corresponding documents are included as exhibits to this report.[20]

1.16 I note that where analysis in this report is rounded, minor casting errors may be apparent in tables.

1.17 This report is based upon the documentation and information that has been made available to me up to the date of this report. Any documentation or information brought to my attention subsequent to the date of this report may require me to adjust and/or qualify this report accordingly.

Structure of this report

1.18 The remainder of my report is set out under the following headings:

---

[19] Transactions not recorded in USD have been converted to USD using historical daily exchange rates published on the websites of the Central Bank of Russia (https://www.cbr.ru/eng/), the Bank of Latvia (https://www.bank.lv/en) and on the website of the Federal Reserve (https://www.federalreserve.gov/default.htm).

[20] A number of the documents provided to me, which have been exhibited to this report, are in Russian. In preparing this report, I have been supported by members of my team who speak and read Russian and have therefore relied upon their translation of these documents when preparing this report.

2. Executive Summary

Introduction

2.1 In this section, I summarise the key findings from the work that I have performed. Details of the work that I have undertaken are set out in the remaining sections of this report and, accordingly, this Executive Summary should be read in conjunction with the remaining sections of this report.

Significant amounts of cash appear to have passed through related parties and do not appear to have flowed to TNG and KPM (Sections 3, 4 and 5)

2.2 Many of the transactions that I have reviewed which were undertaken by, or on behalf of, KPM and TNG seem to have been transacted with related parties, with those related parties then entering into transactions with third party suppliers and customers. As a result, significant amounts of cash appear to have been redirected from KPM and TNG to those related parties. I summarise below the primary ways in which this appears to have taken place.

2.3 Funds raised from Noteholders in 2006 were first received by Tristan, who then issued loans to both TNG and KPM, as well as another related party, Terra Raf. Of the total funds of USD 420 million raised by Tristan, USD 76 million appears to have been paid directly to Terra Raf during 2006 and 2007, with further loans then made by Tristan to Terra Raf during 2008, 2009 and 2010, such that by 31 December 2010, Terra Raf owed Tristan a net amount of USD 118.4 million. Of this amount, I have only been able to trace USD 24 million as being paid, via other related parties, directly back to KPM and TNG. Further, I note that the interest rate that Tristan charged TNG and KPM for the monies loaned to them was significantly higher than the underlying rate of interest that Tristan itself incurred on that debt. My analysis of the loans from Tristan to KPM and TNG shows that had Tristan charged TNG and KPM the same interest rate that Tristan itself incurred, then TNG's and KPM's interest charges would have been around USD 61.9 million lower.[21]

[21] This amount represents approximately 40% of the total interest charges from Tristan which were recorded in TNG's and KPM's financial statements. See analysis in Section 4.

2.4 Similarly, purchases of certain plant and equipment which were used for the construction of the LPG Plant were made by TNG through two related parties, Perkwood and Azalia, with Azalia ultimately purchasing the plant and equipment from a third party, TGE. My analysis of cash flows from TNG to Perkwood, Azalia and TGE shows that Perkwood charged TNG around USD 80.8 million[22] more than the price at which Azalia purchased the underlying plant and equipment from TGE.

2.5 Products produced by TNG and KPM were sold to Vitol, a third party. These sales were also made through a chain of related parties which included Terra Raf, Montvale, General Affinity and Stadoil. I have undertaken a comparison of the value of sales made to Vitol and compared this to the amounts that TNG and KPM received in respect of these sales from the related parties that TNG and KPG sold to. In total, over the period covered by my review, USD 263 million of monies from sales of TNG and KPM products to Vitol[23] were retained by the related parties established under this structure (and, indeed, were subsequently transferred to other related parties under this structure) and from the information that has been made available to me, do not appear to have flowed back to TNG and KPM.

2.6 Further, my analysis of the bank statements for the related parties whom the transactions of KPM and TNG flowed through shows that there were significant withdrawals from these entities by the Stati Parties, including payments of direct bonuses and payroll, as well as payment for personal expenses.

2.7 The findings from my review of TNG's and KPM's cashflows and the value which appears to have been retained by related parties under the structures put in place by the Stati Parties, as well as other direct examples of dividend transfers out of KPM and TNG and direct payments from related parties to the Stati Parties are summarised in the table below.

[22] This amount represents around 70% of the total amount that TNG paid to Perkwood for plant and equipment which was to be purchased from TGE.

[23] This amount represents around 24% of the total cash of USD 1.1 billion received by Terra Raf and Montvale from Vitol (see Appendix 5.2 for more details).

Table 2.1: Summary of my findings

No	Transactions with Stati parties	USD million
1	Difference between sales proceeds from Vitol to Terra Raf, Montvale, General Affinity and Stadoil and sales proceeds of TNG and KPM	**263.0**
2	Payment of funds from the Tristan Notes to Terra Raf and subsequent loans from Tristan to Terra Raf	118.4
	Amounts that I have been able to confirm were transferred on to TNG and KPM	(24)
	Difference – being payments from Tristan to Terra Raf which do not appear to have been paid onwards to TNG or KPM	**94.4**
3	Quantification of excess interest charged on to TNG and KPM by Tristan	**61.9**
	KPM	*9.1*
	TNG	*52.8*
4	Value of declared dividends used to offset trade receivables owed to KPM by Stadoil	**61.1**
5	Additional amounts paid to Perkwood / Azalia for the purchase of plant and equipment from TGE, over and above amounts charged by TGE for the plant and equipment	**80.8**
6	Dividend payments made by KPM	**21.6**
7	Other sundry Stati related expenses identified from my review of the bank statements provided to me	**16.4**
8	Tristan bonus payments to Mr A Stati	**8.4**
9	Other	**0.6**
	Total	**608.2**

There is no evidence that certain related party transactions were undertaken on an 'arm's length' basis (Sections 3 and 6)

2.8 As I explain in Section 3 of this report, the 2006 Indenture contains a number of covenants in respect of transactions by Tristan, KPM and TNG with related parties. Among other things, these covenants stipulate that transactions with related parties (defined as "*Affiliates*"[24] in the 2006 Indenture) with an aggregated value over USD 1 million must be undertaken on an arm's length basis.[25] However, as summarised above, it appears that in numerous instances, the amounts charged to TNG and KPM by related parties for purchases and debt were higher than the corresponding amounts charged to the related parties by the relevant third parties involved. Similarly, the sales proceeds received by TNG and KPM from related parties were significantly lower than the value of the sales proceeds that those corresponding related parties received from third parties. Whilst I accept that it is not uncommon for related parties to charge margins on transactions with one another, I have not been able to establish the commercial rationale for the related party structure established by the Stati Parties and why monies generated from sales of product produced by KPM and TNG were retained in this manner and to such an extent by related parties. Prima facie, it appears that the terms of many of the KPM and TNG transactions with related parties were significantly less favourable than the terms obtained with the relevant third parties. I have not been provided any explanations or documentation to explain the commercial justification for this arrangement. In the absence of such a commercial justification, it appears that transactions between KPM and TNG and the related parties were not on an arm's length basis.

Numerous related party transactions were not disclosed in the KPM and TNG financial statements (Section 6)

2.9 For the purposes of this report, I have also been provided with a copy of certain correspondence between the Stati Parties and KPMG, the auditor of Tristan, TNG and KPM over the period relevant to this report. This correspondence shows that KPMG became aware, subsequent to the dates of its audit opinions, that the 2007 to 2009 financial statements of KPM and TNG were materially misstated as a result of the failure by TNG and KPM to disclose the transactions with Perkwood as related party transactions (and, indeed, that management had failed to disclose Perkwood as a related party in its representations to KPMG). As a result, in 2019, KPMG effectively "withdrew" its audit opinions in respect of the 2007 to 2009 financial statements of KPM and TNG.

---

[24] 2006 Indenture, page 1. Exhibit PwC-009.

[25] 2006 Indenture, page 53. Exhibit PwC-009.

2.10 As I explain in Section 3, the 2006 Indenture contained various reporting requirements for Tristan, TNG and KPM. Included within these requirements was a requirement to report on the fairness of related party transactions, as well as a requirement to provide quarterly and annual financial statements to the noteholders.

2.11 Whilst I have not seen the correspondence with the Noteholders that was prepared by the Stati Parties under the requirements of the 2006 Indenture, to the extent that any such correspondence, as with the 2007 to 2009 financial statements of KPM and TNG, failed to identify and disclose related party transactions, then this correspondence to the noteholders would also have been misstated.

2.12 As I explain in Section 6 of this report, I have also been instructed to undertake my own review to assess whether the KPM and TNG financial statements failed to disclose related party transactions. In total, through my review, I have been able to identify over USD 150 million of related party transactions between 2007 and 2009 which were not disclosed as related party transactions in KPM's and TNG's audited financial statements.

3. Relevant background to the Tristan Notes

Introduction

3.1 In this section, I set out a more detailed overview of the Tristan Notes (and the 2006 Indenture), as relevant to the scope of work that I have been instructed to undertake for this report.

The 2006 Indenture and its subsequent amendments

3.2 As set out in Section 1, I understand that pursuant to the 2006 Indenture and its amendments dated 21 May 2007[26] and 6 June 2007[27], Tristan issued notes in the aggregate principal amount of USD 300 million on 20 December 2006[28] and notes in the aggregate principal amount of USD 120 million on 8 June 2007[29] and that these notes were purchased by the Noteholders.

3.3 The 2006 Indenture contains various covenants regarding financial transactions and reporting, in order to, *inter alia*, protect the rights of the Noteholders. Specifically, Section 4.12 of the 2006 Indenture limits Tristan's, KPM's and TNG's ability to, *inter alia*, enter into transactions with "*Affiliates*". Under the 2006 Indenture, the "*Affiliate*" of any Person is defined to mean "*any other Person directly or indirectly controlling or controlled by or under direct or indirect common control with such* [...] *Person*".[30]

3.4 The 2006 Indenture defines a "*Person*" to mean "*any individual, corporation, partnership, joint venture, association, joint-stock company, trust, unincorporated organization, limited liability company or other entity*".[31]

---

[26] First Amendment to Indenture among Tristan, KPM, TNG and Wells Fargo Bank, N.A. Exhibit PwC-002.

[27] Second Amendment to Indenture among Tristan, KPM, TNG and Wells Fargo Bank, N.A. Exhibit PwC-003.

[28] Combined and Standalone audited Financial Statements of Tristan, KPM and TNG for the year ended 31 December 2006, page F-45, Note 8. Exhibit PwC-004.

[29] Tristan's Annual Report, Combined and Standalone audited Financial Statements of Tristan, KPM and TNG for the year ended 31 December 2007, page F-64, Note 15. Exhibit PwC-005.

[30] 2006 Indenture, page 1. Exhibit PwC-009.

[31] 2006 Indenture, page 16. Exhibit PwC-009.

3.5 Section 4.12[32] of the 2006 Indenture states that Tristan, KPM and TNG could not "*make any payment to, or sell, lease, transfer or otherwise dispose of any of its properties or assets to, or purchase any property or assets from, or enter into or make or amend any transaction, contract, agreement, understanding, loan, advance or guarantee with, or the benefit of, any Affiliate,*" unless:

a. If the aggregate consideration was in excess of USD 1.0 million, the transaction was required to be on an arm's length basis (i.e., the transaction was on "*terms that are no less favourable to* [Tristan] *or to* [KPM or TNG as "*the relevant guarantor*"] *than those that would have been obtained in a comparable transaction by* [Tristan] *or* [KPM or TNG] *with an unrelated Person*");
b. If the aggregate consideration was in excess of USD 3.0 million, Tristan was required to deliver to the Trustee (i.e. Wells Fargo) a resolution of Tristan's board of directors set forth in an Officers' Certificate certifying that a majority of the disinterested members and Tristan's board of directors and at least one independent director of the board of directors have determined that the transaction complied with Section 4.12;
c. If the aggregate consideration was in excess of USD 10.0 million, Tristan was required to deliver to the Trustee (i.e. Wells Fargo) "*an opinion as to the fairness to* [Tristan] or [KPM or TNG] *of such Affiliate Transaction from a financial point of view issued by an accounting, appraisal or investment banking firm of national standing*[.]"

3.6 Section 4.03 of the 2006 Indenture required KPM and TNG to produce stand-alone and combined financial statements with Tristan on a quarterly and annual basis, as well as a reserve report from an independent petroleum engineer on an annual basis.[33]

3.7 Section 4.04(a) of the 2006 Indenture required Tristan, KPM and TNG to deliver to the Trustee, i.e. Wells Fargo, within ninety days after the end of each fiscal year, an Officers' Certificate stating that a review of the activities of Tristan and its subsidiaries had been made "*with a view to determining whether* [Tristan] *has kept, observed, performed and fulfilled its obligations*" under the 2006 Indenture, and stating that, for each Officer signing the certificate, "*to the best of his or her knowledge* [Tristan] *has kept, observed, performed and fulfilled each and every covenant*" of the 2006 Indenture and "*is not in default in the performance or observance of any of the terms, provisions and conditions*" of the 2006 Indenture[34].

[32] 2006 Indenture, page 53, sub-section headed: "*Transactions with Affiliates*". Exhibit PwC-009.
[33] 2006 Indenture, pages 42-43. Exhibit PwC-009.
[34] 2006 Indenture, pages 43-44. Exhibit PwC-009.

3.8 Section 4.04(b)[35] of the 2006 Indenture required that the year-end financial statements delivered pursuant to Section 4.03 be accompanied by a written statement of Tristan's independent public accountants that "*in making the examination necessary for certification of such financial statements, nothing has come to their attention that would lead them to believe that* [Tristan] *has violated any of the provisions of Article 4 or Article 5 hereof, or if any such violation has occurred, specifying the nature and period of existence thereof*", including, *inter alia*, Section 4.12's restrictions on transactions with Affiliates.

3.9 I understand that the Stati Parties represented that proceeds from the Tristan Notes would be used to repay KPM's and TNG's existing debt, and to fund KPM's and TNG's working capital, general corporate purposes, and capital expenditures[36].

3.10 As explained further below, I understand there is evidence showing that these representations were false. The Republic of Kazakhstan alleges that the Stati Parties orchestrated multiple undisclosed related party transactions through which TNG's reported costs were fraudulently inflated, including those related to the construction of the LPG Plant which was paid for, in part, through an affiliated company, Perkwood Investments Ltd ("**Perkwood**"), and that the Stati Parties used Perkwood as a vehicle for extracting value from KPM and TNG.

Overview of the 2012 Sharing Agreement

3.11 On 17 December 2012, the Stati Parties, as well as Tristan, on the one side, and a certain number of the Noteholders (the so-called "**Majority Noteholders**"), on the other side, entered into a "Sharing Agreement and Assignment of Rights"[37] (the "**Sharing Agreement**"). Through the Sharing Agreement, a new type of Tristan Notes (the "**Modified Tristan Notes**") was created.

3.12 Following the conclusion of the Sharing Agreement, I am instructed that a consent solicitation procedure took place in which the Noteholders that had not been party to the Sharing Agreement could agree to the modified terms and exchange their Tristan Notes for Modified Tristan Notes. I am instructed that the consent solicitation ended on 14 February 2013 with the Tristan Noteholders representing 99.8% of the principal amount of the Tristan Notes agreeing to the modified terms.

[35] 2006 Indenture, page 44. Exhibit PwC-009.

[36] Please refer for example to Tristan prospectus for issue of Tristan Notes, page 25. Exhibit PwC-013.

[37] Sharing Agreement and Assignment of Rights. Exhibit PwC-014.

3.13 Under the Sharing Agreement, it was agreed that any amounts collected by the Stati Parties, including Tristan, through the ECT Arbitration proceeding by the Stati Parties against the Republic of Kazakhstan (the "**Proceeds**"[38]; I set out an overview of these arbitral proceedings below) are to be paid to an account[39] administered by a security agent.[40] The Sharing Agreement defines the security agent as Wilmington Trust, National Association or any successor thereto.[41]

3.14 The Sharing Agreement provides for a mechanism for the distribution of the Proceeds paid into the account among the Stati Parties and the noteholders. The Sharing Agreement provides also for certain mechanisms based on which the Stati Parties can be released from their obligations under the Sharing Agreement. One significant mechanism is compliance by the Stati Parties with the provisions of the Sharing Agreement and the making of a certain minimum payment.[42]

Overview of the Award obtained by the Stati Parties in the ECT Arbitration

3.15 As set out in Section 1, I understand that on 19 December 2013, the Stati Parties obtained an arbitral award issued by the Tribunal of around USD 500 million against the Republic of Kazakhstan.[43] The Awarded Amount was based, in respect of the value of the LPG Plant, on an indicative bid which had been submitted for that plant on 25 September 2008.[44] I understand that this indicative bid was based on a combination of TNG's historical costs allegedly spent on the LPG Plant[45] and TNG's and KPM's financial statements.[46]

---

[38] Sharing Agreement and Assignment of Rights, Section 1 "Definitions", definition of "*Proceeds*", page. 6. Exhibit PwC-014.

[39] Sharing Agreement and Assignment of Rights, Section 1 "Definitions", definition of "*Account*", page 2. Exhibit PwC-014.

[40] Sharing Agreement and Assignment of Rights, Section 3 "Direction of Proceeds", page 9. Exhibit PwC-014.

[41] Sharing Agreement and Assignment of Rights, Section 1 "Definitions", definition of "*Security Agent*", page 7. Exhibit PwC-014.

[42] Sharing Agreement and Assignment of Rights, Section 7 "Effect of Compliance By Claimant Parties and Minimum Payment", pages 14-15. Exhibit PwC-014.

[43] Award issued by the Tribunal in the ECT Arbitration dated 19 December 2013. Exhibit PwC-001.

[44] Award issued by the Tribunal in the ECT Arbitration dated 19 December 2013, Paragraph 1747, page 382. Exhibit PwC-001.

[45] KazMunaiGas Exploration Production JSC Indicative Bid, dated 25 September 2008, points d and f. Exhibit PwC-010.

[46] The Information Memorandum on Project Zenith, issued by Renaissance Capital, in August 2008. The following financial information is referred to on page 4: "*The financial information presented in this Information Memorandum is derived from the unaudited interim combined balance sheets and statements of income, cash flows and changes in shareholders' equity of KPM, TNG and Tristan Oil, as of and for the six months ended 30 June 2007 and 2008, and the audited combined balance sheets and statements of income, cash flows and changes in shareholders' equity of KPM, TNG and, with effect from its incorporation on 24 October 2006 and Tristan Oil, as of 31 December 2005, 2006 and 2007. In addition, financial information presented in this Information Memorandum is derived from the individual interim unaudited balance sheets and statements of income, cash flows and changes in shareholders' equity of KPM, TNG and, Tristan Oil, as of and for the six months ended 30 June 2007 and 2008, and the audited individual balance sheets and statements of income, cash flows and changes in shareholders' equity of KPM, TNG and, with effect from its incorporation on 24 October 2006, Tristan Oil for the years ended 31 December 2005, 2006 and 2007 KPM and TNG are in the process of restating their financials for the years ended 31 December 2005 and 2006 and*

3.16 After the date of the Award, the Republic of Kazakhstan initiated annulment proceedings in the Svea Court of Appeals in Stockholm, at the seat of the ECT Arbitration. During the course of the annulment proceedings, I understand from HSF that a new set of facts was discovered by the Republic of Kazakhstan that allegedly reflected that the Award and the Awarded Amount had been fraudulently obtained.

3.17 As explained further below, I understand that the Republic of Kazakhstan is contesting the enforcement of the Award, claiming that it has been procured by the Stati Parties by fraud. I understand that the Republic of Kazakhstan's challenge reflects further information which has come to light through to late 2019, including the withdrawal of previously issued audit and review opinions by KPMG Audit LLC ("**KPMG**") on the certain financial statements of TNG, KPM and Tristan.

Overview of my understanding of the Republic of Kazakhstan's case on fraud

3.18 I understand that the Republic of Kazakhstan's case on fraud against the Stati Parties is grounded on the alleged fraudulent extraction of funds through inflated costs, concealed by fraudulent financial reporting. During the period from at least 2007 to 2009, the Republic of Kazakhstan alleges that the Stati Parties materially falsified the financial statements of (1) Tristan; (2) KPM; and (3) TNG (jointly, the "**Financial Statements**"). The Republic of Kazakhstan alleges that the Stati Parties did this by undertaking a series of inflated related-party transactions that they concealed from their auditors and other third parties and failed to disclose in the Financial Statements. The Republic of Kazakhstan alleges that the effect of these inflated related-party transactions was to significantly overstate the costs of the underlying companies and, in turn, allowing the Stati Parties to then directly benefit from the value of the overstated costs, as well as these subsequently leading to a material overstatement of the Awarded Amount.

Tristan Oil, with effect from its incorporation on 24 October 2006, for the year ended 31 December 2006." Exhibit PwC-011. See also Exhibit PwC-100.

3.19 After the Award was issued, I understand that the Republic of Kazakhstan claims that certain facts came to light that began to reveal the Stati Parties' fraudulent scheme. *Inter alia*, in their Financial Statements and during the ECT Arbitration, the Stati Parties claimed to have invested USD 245 million[47] in the construction of the LPG Plant. As explained above, I understand that the Awarded Amount in respect of the LPG Plant was based on an indicative bid which was submitted by KazMunaiGas Exploration Production JSC which, in turn, was based on the historical costs recorded in TNG's June 2008 interim financial statements in respect of the LPG Plant (which stood at USD 193 million as at June 2008).[48] However, the Republic of Kazakhstan claims that evidence discovered after the Award shows that this amount was based on deliberate misrepresentations in relation to, and recording of, the real costs incurred by the Stati Parties. These misrepresentations were based on various schemes involving a purportedly independent, arms-length company, Perkwood.

3.20 I understand that in reality, Perkwood was not an independent arms-length company but a company controlled by the Stati Parties and which had no employees nor premises and filed dormant company accounts.

3.21 I understand that in its legal proceedings, the Republic of Kazakhstan has put forward that using Perkwood "[t]*he Statis (and the Stati Companies) utilised a number of schemes to inflate fictitiously the true construction costs that had actually been incurred in respect of the LPG Plant*"[49], including inter alia via the following arrangements[50]:

- **Management fee under the Perkwood SPA.** Charging of an unsubstantiated "*management fee*" of USD 44 million by Perkwood to TNG under the Sale and Purchase Agreement between Perkwood and TNG ("**Perkwood SPA**").

- **Annex 2 to the Perkwood SPA.** 'Resale' to TNG, at a significant and unsubstantiated mark-up, of certain LPG equipment ("**TGE Equipment**") acquired from a German third party equipment manufacturer and supplier, Tractebel Gas Engineering GmbH ("**TGE**"), through a series of sham transactions through Azalia LLC ("**Azalia**" or "**Azalija**") and Perkwood, both entities at all material times controlled by the Stati Parties.[51]

---

[47] Refer to, for example, Award issued by the Tribunal in the ECT Arbitration dated 19 December 2013, paragraph 879. Exhibit PwC-001.

[48] Tristan's Interim Report, Combined and Standalone unaudited Interim Financial Statements of Tristan, KPM and TNG for three and six months ended 30 June 2008, page 623 (pdf 136), Note 15. Exhibit PwC-015.

[49] Defendant's Points of Claim in the English High Court, paragraph 10. Exhibit PwC-016.

[50] I consider these in more detail further below.

[51] With respect to control: Perkwood: Claimants' Points of Defence in the English High Court, paragraph 11 (Exhibit PwC-017) – with reference to the Defendant's Points of Claim in the English High Court, paragraph 9 (Exhibit PwC-016). Azalia: Claimants' Points of Defence in the English High Court, paragraph 16.1 (Exhibit PwC-017).

- Over-recognising capitalised interest in respect of the "*costs*" set out above.

3.22 I understand that the Republic of Kazakhstan also alleges that the Stati Parties represented the Financial Statements of Tristan, KPM, and TNG as reliable and accurate, when in fact they were materially misstated. Specifically, it is alleged that the Stati Parties failed to disclose inflated transactions with related parties (including Perkwood) in these financial statements and, failed to include Perkwood in the representations on related parties made by the Stati Parties to KPMG.

3.23 The Republic of Kazakhstan alleges that the Stati Parties used the audited, yet misstated, Financial Statements in their reporting to investors in the Tristan Notes (the Noteholders). Further, it is alleged that the Stati Parties concealed the fact that the finances raised by Tristan were not being used for the expressed purpose of supporting TNG and KPM and their investments in Kazakhstan. Instead, through the related party structures put in place, it is alleged that the Stati Parties were able to divert material amounts of the funds raised from the Tristan Notes away from KPM's and TNG's operations in Kazakhstan.

3.24 As explained in Section 1, I have been instructed to consider the extent to which the accounting information and other documentation provided to me supports the allegations of fund diversions that have been made by the Republic of Kazakhstan. In the following section, I therefore consider the extent to which there is evidence to support the allegation that KPM's and TNG's funds were used for purposes not related to the LPG Plant construction and KPM's and TNG's operations in Kazakhstan. In Section 5, I then consider the extent to which there is also evidence that funds from sales which were due to KPM and TNG were diverted away by the Stati Parties. Finally, in Section 6, I consider the extent to which there is evidence that the Stati Parties provided false (or misstated) financial statements in respect of KPM and TNG and I consider the findings set out in this report in the context of the requirements of the 2006 Indenture.

4. My review of the application of funds from the Tristan Notes and the operations of TNG and KPM

Introduction

4.1 In this section I set out the details of, and findings from, the work that I have performed to consider whether the funds raised for, and monies generated by, KPM and TNG were used for purposes other than for their operations in Kazakhstan. I set out my comments below under the following sub-headings:

a. Payment of funds from the Tristan Notes to Terra Raf;
b. Interest charges from Tristan to TNG and KPM;
c. Payments to Perkwood;
d. Dividend payments; and
e. Salaries and other charges.

4.2 As set out in Section 3, the Republic of Kazakhstan alleges, *inter alia*, that the Stati Parties established a series of related parties through which TNG and KPM transactions passed, in order to divert value / funds from TNG and KPM. Accordingly, I have undertaken a process to seek to identify parties which are related to the Stati Parties in order to then inform my subsequent review of the accounting and bank data that has been provided to me. Before setting out my findings for each of the above categories, I therefore first set out below details of the work that I have performed to identify the 'related parties' of TNG, KPM, Tristan and the Stati Parties.

Identification of related parties

4.3 Appendix 4.1 sets out the list of parties that I have identified during the course of my work which appear to be related to the Stati Parties. In total I have identified 83 related parties[52], including corporates, as well as individuals from the Stati family (Anatoli/Anatolie Stati; Larisa Stati (wife of Anatoli); and their adult children, Gabriel and Nicoleta).

[52] I note that there were in fact potentially 84 related parties, as the name "TD Dedal Instrument COO" was applied to two companies which were incorporated separately.

4.4 These related parties have been identified as belonging to a group under the ultimate control of Mr A Stati, or his immediate family. For the purposes of this exercise I have identified as related parties those entities which are either individuals who I am instructed are Stati family members or entities which I am instructed were effectively controlled by the Stati family members. In identifying related parties I have relied on data supplied in a range of sources including audited financial statements, legal documents filed in various proceedings and one press article. Table 4.1 below summarises the sources of information that I have used to identify these related parties. I have undertaken no further investigation to determine if the parties that I have identified are actually related parties and have accepted prima facie that these are in fact so.

Table 4.1: Sources of data used to identify potential related parties

Source	Number of documents analysed	Number of Related Parties identified in source document[53]
Audited financial Statements	19	16
Bank Statements	32	34
Representation Letters	11	13
Legal	2	61
Media Documents	1	39

Source: Appendix 4.1.

Payment of funds from the Tristan Notes to Terra Raf

Overview of the loan notes raised by Tristan

4.5 As explained in Sections 1 and 3, the Stati Parties raised funds to finance TNG and KPM *inter alia* via the Tristan Loan Notes. I understand that Tristan's "*purpose*" was to issue these "*Senior Secured Notes*"[54] which were intended "*to repay $160.3 million outstanding under TNG's existing bank credit facility, including prepayment premium, and to fund the working capital and general corporate purposes of KPM and TNG*".[55]

[53] Please note that a number of related parties appear multiple times across a number of sources.

[54] Combined and Standalone audited Financial Statements of Tristan, KPM and TNG for the year ended 31 December 2006, F-41, Note 1. Exhibit PwC-004.

[55] Tristan prospectus for issue of Tristan Notes, page 25. Exhibit PwC-013.

4.6 Tristan issued USD 300 million of 10.5% "Senior Secured Notes" on 20 December 2006[56] with a further USD 120 million issued on 8 June 2007.[57] These notes were secured on *inter alia* (1) 100% of the capital stock of Tristan and of KPM and TNG, as guarantors, and (2) all notes payable to Tristan by KPM, TNG and Terra Raf[58]. The notes were secured jointly and severally by guarantees from TNG and KPM.[59]

4.7 On 22 December 2006, Tristan lent USD 181 million to TNG and USD 30 million to KPM,[60] with both loans at an interest rate of 17.65% per annum and to be repaid by 22 December 2011.[61] On 18 and 19 June 2007, Tristan lent a further USD 94 million to TNG and USD 20 million to KPM respectively,[62] with both loans at an interest rate of 16% per annum.[63] I discuss these interest rates further in the next sub-section of this report.

4.8 In addition to lending funds to KPM and TNG, the bank statements provided to me show that Tristan also lent USD 76 million of the funds from the Tristan Notes to Terra Raf in 2006 and 2007.[64] Further, as I explain below, Tristan then continued to make a number of additional loans to Terra Raf over subsequent years.

4.9 I note that the Tristan Prospectus explained the following in respect of funds to be transferred to Terra Raf: "*Tristan Oil used USD 76.0 million from the net proceeds of the Note Offering to make a loan to Terra Raf, at an interest rate of 0%. Terra Raf used USD 70.0 million of the proceeds from this loan to repay USD 15.9 million and USD 54.1 million of accounts payable to each of TNG and KPM with respect to sales of oil and condensate*".[65]

---

[56] Combined and Standalone audited Financial Statements of Tristan, KPM and TNG for the year ended 31 December 2006, page F-45, Note 8. Exhibit PwC-004.

[57] Tristan's Annual Report, Combined and Standalone audited Financial Statements of Tristan, KPM and TNG for the year ended 31 December 2007, page F-64, Note 15. Exhibit PwC-005.

[58] Combined and Standalone audited Financial Statements of Tristan, KPM and TNG for the year ended 31 December 2006, F-45, Note 8. Exhibit PwC-004.

[59] Tristan prospectus for issue of Tristan Notes, front page. Exhibit PwC-013.

[60] Rietumu Bank statements of Tristan, Exhibit PwC-051.

[61] Tristan's Annual Report, Combined and Standalone audited Financial Statements of Tristan, KPM and TNG for the year ended 31 December 2007, page F-62, Note 10. Exhibit PwC-005.

[62] Rietumu Bank statements of Tristan, Exhibit PwC-051.

[63] Tristan's Annual Report, Combined and Standalone audited Financial Statements of Tristan, KPM and TNG for the year ended 31 December 2007, page F-62, Note 10. Exhibit PwC-005.

[64] Rietumu Bank statements of Tristan, Exhibit PwC-051.

[65] Tristan prospectus for issue of Tristan Notes, page 60. Exhibit PwC-013.

Review of Tristan's loans to Terra Raf

4.10 I understand that a promissory note for USD 76 million was signed between Tristan and Terra Raf on 20 December 2006, with USD 6 million being issued to Terra Raf in 2006 and a further USD 70 million issued in 2007[66]. I note that, unlike Tristan's loans to TNG and KPM, the amounts loaned to Terra Raf were stated to be "*interest free and repayable on demand*."[67]

4.11 Tristan's 2007 financial statements disclose a loan to Terra Raf of USD 6 million as at 31 December 2006 and a net loan balance of USD 75.345 million at 31 December 2007.[68] The balance due from Terra Raf had decreased slightly to USD 75.322 million at 31 December 2008.[69] Tristan's 2009 financial statements showed an increase in the balance owing from Terra Raf to USD 115.986 million as at 31 December 2009.[70]

4.12 Table 4.2 below sets out the annual cash flows in relation to these loans that I have been able to identify from the bank statements provided to me.

Table 4.2: Cash flows to and from Tristan and Terra Raf, per bank statements (USD)

Year Ended	Paid by Tristan to Terra Raf	Paid by Terra Raf to Tristan	(Net paid to Terra Raf)/paid to Tristan
31 Dec 2006	(6,000,000)	-	(6,000,000)
31 Dec 2007	(70,000,000)	659,600	(69,340,400)
31 Dec 2008	-	23,000	23,000
31 Dec 2009	(46,459,500)	2,635,100	(43,824,400)
31 Dec 2010	(1,155,500)	1,927,151	771,651
Total	**(123,615,000)**	**5,244,851**	**(118,370,149)**

Source: Rietumu Bank statements of Terra Raf and Rietumu Bank statements of Tristan. Exhibits PwC-049 and PwC-051.

[66] Tristan's Annual Report, Combined and Standalone audited Financial Statements of Tristan, KPM and TNG for the year ended 31 December 2007, page F-62, Note 10. Exhibit PwC-005.

[67] Tristan's Annual Report, Combined and Standalone audited Financial Statements of Tristan, KPM and TNG for the year ended 31 December 2007, page F-62, Note 10. Exhibit PwC-005.

[68] Tristan's Annual Report, Combined and Standalone audited Financial Statements of Tristan, KPM and TNG for the year ended 31 December 2007, page F-62, Note 10. Exhibit PwC-005.

[69] Tristan's Annual Report, Combined and Standalone audited Financial Statements of Tristan, KPM and TNG for the year ended 31 December 2008, pages F-64-65, Note 17. Exhibit PwC-006.

[70] Tristan's Annual Report, Combined and Standalone audited Financial Statements of Tristan, KPM and TNG for the year ended 31 December 2009, pages F-78-80, Note 17. Exhibit PwC-007.

4.13 As shown in the table above, the net value of the cashflows loaned by Tristan to Terra Raf as at 31 December 2009 per the bank statements provided to me was USD 119.1 million.[71] I note that this amount is around USD 3.1 million higher than the balance disclosed in Tristan's 31 December 2009 financial statements. I have not been able to establish the reason for this variance.

4.14 As explained below, I have undertaken a separate exercise to seek to establish how the monies loaned by Tristan to Terra Raf were then subsequently utilised by Terra Raf. The volume of transactions entering in to and out of Terra Raf's bank statements means that it is not always possible to directly match cash inflows from Tristan to subsequent cash outflows.[72] However, as detailed below, I have been able to identify a number of instances where payments from Tristan to Terra Raf then appear to have been directly paid straight out by Terra Raf to other entities.

Review of Terra Raf's onwards transfers of the USD 6 million loan received from Tristan

4.15 Of the USD 6m that Tristan paid to Terra Raf in December 2006, I have been able to establish that two separate USD 3 million payments were subsequently made by Terra Raf to Getter Investment Limited ("**Getter**") and Melvin Production Inc ("**Melvin**")[73], both related parties.[74] I review each of these onwards transfers below.

[71] Note that Table 4.2 shows the net balance as of 31 December 2010. Accordingly, to reach this balance as at 31 December 2009, it is necessary to add the USD 771,651 balance for 2010 to the total shown in Table 4.2 of USD (118,370,149).

[72] For example, I note that the USD 70 million loan from Tristan to Terra Raf in 2007 was not immediately followed by a direct payment onwards to KPM or TNG. Instead, the next significant payment made by Terra Raf after receiving the USD 70 million loan from Tristan was a USD 4.0 million payment, two days later, which Terra Raf made to Romneftegaz. Terra Raf's bank statements then show a mix of other incoming and outcoming cash flows, including monies paid to Terra Raf by Vitol and also monies paid by Terra Raf to a range of related companies, including Stadoil and General Affinity. Source: Rietumu Bank statements of Terra Raf and Rietumu Bank statements of Tristan. Exhibits PwC-049 and PwC-051.

[73] Rietumu statements of Getter and Rietumu Bank statements of Melvin. Exhibits PwC-032 and PwC-038.

[74] I have included in Appendix 4.1 to this report an explanation of the basis on which I have identified 'related parties' that are referenced throughout this report, along with details of the supporting source information that I have relied upon for that process.

Review of Terra Raf's transfer to Getter

4.16 Figure 4.1 below illustrates the payment structure to Getter referred to above.

Figure 4.1: Illustration of the transfer to Getter of Tristan's loan to Terra Raf

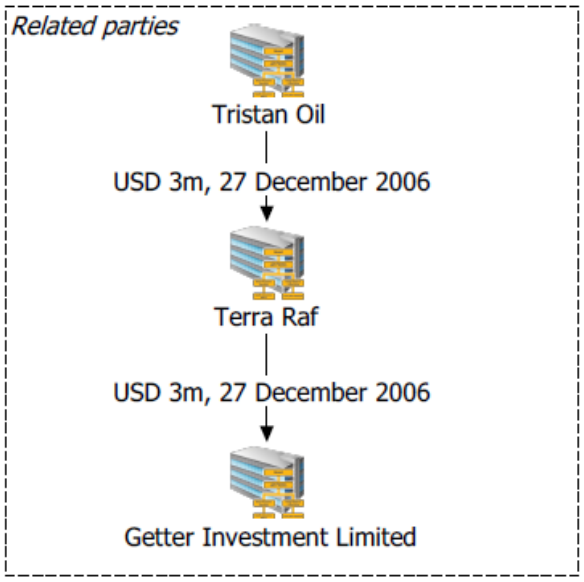

Source: Rietumu Bank statements of Getter, Exhibit PwC-032.

4.17 The USD 3 million shown in the above figure brought Getter's bank account out of overdraft[75], an overdraft that arose principally from a USD 2.85 million transfer to Terra Raf two weeks prior. Getter's bank statements record this USD 2.85 million payment as a return payment "*as per contract No No GET_TER_02; for consulting services*".[76] Following this, Getter made three transfers to Romneftegaz LLC ("**Romneftegaz**") between 3 and 8 January 2007 totaling USD 1.2 million[77] before receiving USD 1.03 million back from Romneftegaz on 10 January 2007.[78]

[75] Rietumu Bank statements of Getter, Exhibit PwC-032.

[76] Rietumu Bank statements of Getter, for transaction dated 14 December 2006, Exhibit PwC-032.

[77] Rietumu Bank statements of Getter, Exhibit PwC-032.

[78] Rietumu Bank statements of Getter, Exhibit PwC-032.

Review of Terra Raf's transfer to Melvin

4.18 Figure 4.2 below illustrates the payment flow for the USD 3 million payment from Terra Raf to Melvin.

Figure 4.2: Illustration of the transfer to Melvin of Tristan's loan to Terra Raf

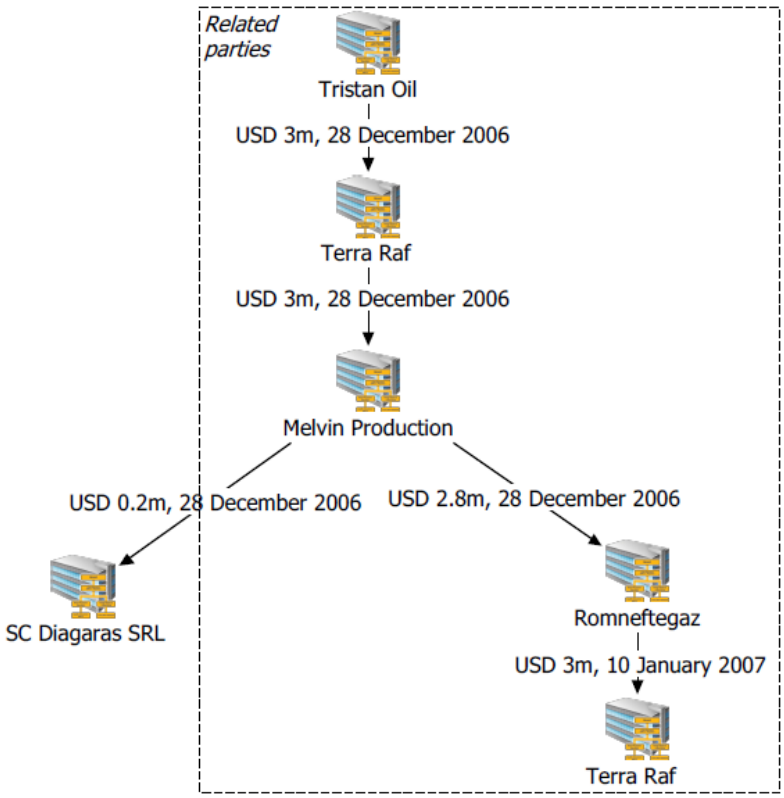

Source: Rietumu Bank statements of Melvin, Exhibit PwC-038.

4.19 As can be seen from the figure above, the transfer to Melvin was circulated via another related party, Romneftegaz, before it was paid back in full to Terra Raf some 13 days later.[79]

[79] Rietumu Bank statements of Melvin and Rietumu Bank statements of Terra Raf. Exhibits PwC-038 and PwC-049.

Review of Terra Raf's transfers to Hayden

4.20 I have also been able to establish from the bank statements that I have reviewed that a USD 24 million payment from Tristan to Terra Raf in June 2009 was paid straight out to Hayden Intervest ("**Hayden**")[80], another related party. On the same day that it received the monies from Terra Raf, Hayden paid USD 14.3 million to Montvale Invest Ltd ("**Montvale**")[81], followed by a further USD 7.4 m payment to Montvale two days later[82]. These payments total USD 21.7 million (versus the USD 24 million amount paid by Tristan to Terra Raf). Montvale then transferred USD 23.9 million[83] to Stadoil (another related party), and Stadoil then paid USD 20.9 million to KPM[84], as well as transferring USD 3 million back to Montvale,[85] who transferred this amount on to General Affinity[86], who in turn paid this amount to TNG.[87] This series of cash flows is illustrated in Figure 4.3 below.

[80] Rietumu Bank statements of Terra Raf, dated 17 June 2009. Exhibit PwC-049.

[81] Rietumu Bank statements of Hayden, dated 17 June 2009. Exhibit PwC-033.

[82] Rietumu Bank statements of Hayden, dated 19 June 2009. Exhibit PwC-033.

[83] Rietumu Bank statements of Montvale: three transfers: USD 10.0 million on 17 June 2009; USD 6.6 million on 17 June 2009; and USD 7.4 million on 19 June 2009. Transactions II0906171760677, II0906171760680 and II0906191761787. Exhibit PwC-039.

[84] Rietumu Bank statements of Stadoil: five transfers: USD 6.28 million and USD 10.27 million on 17 June 2009; USD 3 million, USD 1.03 million and USD 0.35 million on 19 June 2009. ExhibitPwC-047.

[85] Rietumu Bank Statements of Stadoil, transaction II0906191762208, 19 June 2009. Exhibit PwC-047.

[86] Rietumu Bank statements of Montvale, transaction II0906191762215, 19 June 2009. Exhibit PwC-039.

[87] Rietumu Bank statements of Montvale, transaction II0906191762215, 19 June 2009. Exhibit PwC-039.

Figure 4.3: Illustration of transfer of USD 24 million loan from Tristan to Terra Raf

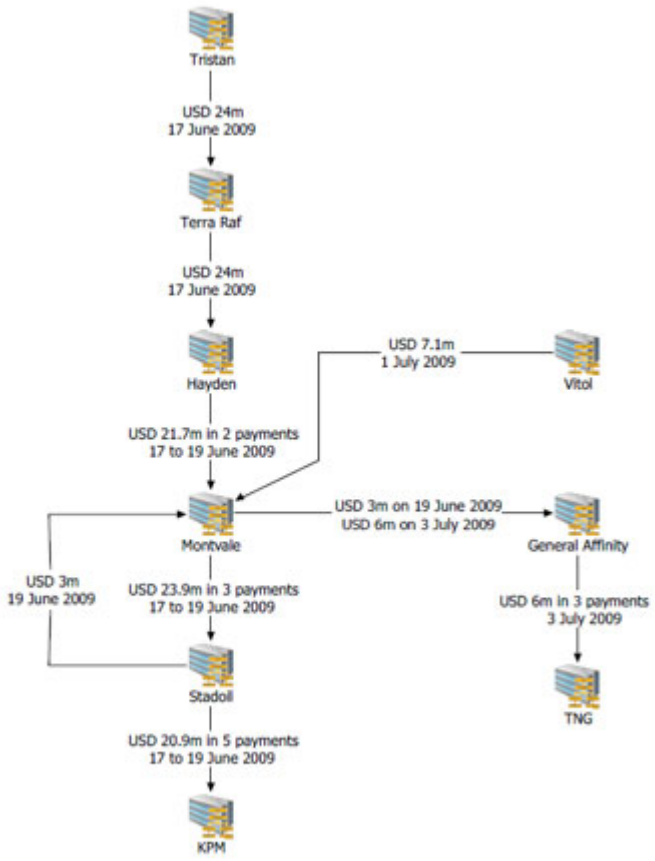

Source: Rietumu Bank statements of General Affinity, Stadoil, Montvale, Hayden, Terra Raf and Tristan. Exhibits PwC-031, PwC-047, PwC-039, PwC-033, PwC-049, PwC-051.

4.21 Further, I note that a USD 6m payment[88] from Tristan to Terra Raf in July 2009 was also passed to Hayden,[89] then to Montvale,[90] who then paid USD 11.8 million[91] to General Affinity. General Affinity then transferred USD 11.8 million[92] to Tristan. All of these transactions occurred on 28 July 2009.

[88] Rietumu Bank Statements of Tristan, transaction II0907281761618, 28 July 2009. Exhibit PwC-051.

[89] Rietumu Bank Statements of Terra Raf, transaction II0907281761628, 28 July 2009. Exhibit PwC-049.

[90] Rietumu Bank Statements of Hayden, transaction II0907281761637, 28 July 2009. Exhibit PwC-033.

[91] Rietumu Bank statements of Montvale, transaction II0907281761657, 28 July 2009. Exhibit PwC-039.

[92] Rietumu Bank Statements of General Affinity, transaction II0907281761848, 28 July 2009. Exhibit PwC-031.

Conclusion

4.22 As can be seen from the analysis above, of the original USD 420 million loan note amounts raised by Tristan, USD 76 million was, as referenced in the Tristan Prospectus, lent by Tristan to Terra Raf during 2006 and 2007 (via promissory loans of USD 6 million and USD 70 million respectively – of these promissory notes, I have been able to trace the USD 70 million flowing from Terra Raf to other related parties, but have been unable to trace these amounts flowing directly back to TNG and KPM; in respect of the USD 6 million promissory note, I have been able to trace the onwards payment of this loan to other related parties and have not seen evidence of this amount ultimately transferring to KPM and TNG). These loans to Terra Raf were followed by further loans by Tristan to Terra Raf during 2008, 2009 and 2010. By 31 December 2010, Terra Raf's loan liability to Tristan was USD 118.4 million.[93]

4.23 Through the bank statements that have been provided to me I have been able to trace the onwards transfer of a number of these loans from Tristan to Terra Raf. Of the net total of USD 118.4 million lent by Tristan to Terra Raf by 31 December 2010, I have only been able to trace USD 24 million of this amount flowing directly to TNG and KPM. The other amounts appear to have been paid by Terra Raf to a series of other related party transactions and I have been unable to trace the onwards flow of these other amounts.

4.24 Further, in respect of the 2006 and 2007 loans made by Tristan (from the funds raised through the Tristan Notes) to Terra Raf, I note that (i) these appear to have been at a zero rate of interest (which is lower than the interest Tristan itself was required to pay on the Tristan Notes and significantly lower than the interest that Tristan charged KPM and TNG for their loans); and (ii) I have not seen any evidence that KPM's and TNG's original guarantee of the monies raised by Tristan was transferred to Terra Raf with these loans. That is, it appears that the guarantee for the loans made to Terra Raf remained with KPM and TNG.

Interest charges from Tristan to TNG and KPM

4.25 As set out above, the funds raised from the Tristan Notes were originally raised by Tristan and then lent on by Tristan to KPM and TNG (as well as to Terra Raf). In this sub-section, I set out my analysis of the interest paid by KPM and TNG to Tristan on these loans and compare that interest to the underlying interest that Tristan itself paid on the Tristan Notes.

[93] Please refer to Table 4.2, Rietumu Bank statements of Terra Raf and Rietumu Bank statements of Tristan. Exhibits PwC-049 and PwC-051.

Quantification of the interest paid by KPM and TNG to Tristan

4.26 Table 4.3 below shows the value of the interest expenses recorded in KPM's and TNG's financial statements and compares these amounts to the interest receipts from KPM and TNG shown in the financial statements of Tristan.

Table 4.3: Interest payments from KPM and TNG to Tristan per their respective financial statements as compared to Tristan's financial statements (all amounts in USD)

Year ended	KPM		TNG	
31 December	Per KPM's financial statements[94]	Interest income per Tristan's financial statements[95]	Per TNG's financial statements[96]	Interest income per Tristan's financial statements[97]
2006[98]	88,250	88,250	532,442	527,588
2007	7,092,986	6,029,038	40,536,868	34,456,338
2008	8,636,583	7,341,096[99]	47,769,608	40,604,067[100]
2009	7,228,386	5,782,709	44,630,941	35,704,753

[94] Tristan's Annual Report, Combined and Standalone audited Financial Statements of Tristan, KPM and TNG for the years ended 31 December 2007, 2008 and 2009, pages F-104, F-100 and F-125 respectively. Exhibits PwC-005, PwC-006, PwC-007.

[95] Tristan's Annual Report, Combined and Standalone audited Financial Statements of Tristan, KPM and TNG for the years ended 31 December 2007 (page F-68, Note 18), Tristan's Annual Report, Combined and Standalone Financial Statements of Tristan, KPM and TNG for the year ended 31 December 2009 (page F-79, Note 17). Exhibits PwC-005 and PwC-007 respectively.

[96] Tristan's Annual Report, Combined and Standalone audited Financial Statements of Tristan, KPM and TNG for the year ended 31 December 2007 (page F-147, Note 28), Tristan's Annual Report, Combined and Standalone audited Financial Statements of Tristan, KPM and TNG for the year ended 31 December 2008 (page F-138, Note 29), Tristan's Annual Report, Combined and Standalone Financial Statements of Tristan, KPM and TNG for the year ended 31 December 2009 (page F-173, Note 30). Exhibits PwC-005, PwC-006 and PwC-007 respectively.

[97] Tristan's Annual Report, Combined and Standalone audited Financial Statements of Tristan, KPM and TNG for the year ended 31 December 2007 (page F-68, Note 18), Tristan's Annual Report, Combined and Standalone Financial Statements of Tristan, KPM and TNG for the year ended 31 December 2009 (page F-79, Note 17). Exhibits PwC-005 and PwC-007 respectively.

[98] For 2006 the interest paid by TNG and KPM to Tristan is recorded as the same, or similar, and does not appear to have recorded withholding tax applied.

[99] USD 6,029,038 is a restated prior year figure in Tristan's Annual Report, Combined and Standalone audited Financial Statements of Tristan, KPM and TNG for the year ended 31 December 2008, page F-64, Note 17, Exhibit PwC-006. USD 7,092,986 was recorded in Tristan's Annual Report, Combined and Standalone audited Financial Statements of Tristan, KPM and TNG for the year ended 31 December 2007, page F-68, Note 18(b), Exhibit PwC-005.

[100] USD 40,604,067 is a restated prior year figure in Tristan's Annual Report, Combined and Standalone audited Financial Statements of Tristan, KPM and TNG for the year ended 31 December 2008, page F-64, Note 17, Exhibit PwC-006. USD 40,536,868 was recorded in Tristan's Annual Report, Combined and Standalone audited Financial Statements of Tristan, KPM and TNG for the year ended 31 December 2007, page F-68, Note 18(b), Exhibit PwC-005.

Total	**23,046,205**	**19,241,093**	**133,469,859**	**111,292,746**

4.27 As shown in the table above, the interest payments received by Tristan from KPM and TNG are lower than the corresponding interest charges in KPM's and TNG's financial statements.[101] I understand that this difference is due to withholding tax as the interest income in Tristan's financial statements is presented net of withholding tax, whereas KPM's and TNG's financial statements show the gross interest expense.[102]

Quantification of the excess interest paid by KPM and TNG to Tristan

4.28 As explained above, whilst Tristan paid an interest rate of 10.5% on the Tristan Notes, Tristan charged TNG and KPM rates of between 16% and 17.65% on the loans it then made to them.[103] In Table 4.4 below I compare the interest expenses incurred by TNG and KPM per their financial statements with my calculation of the interest expense had TNG and KPM been granted their loans from Tristan at a rate of 10.5% (i.e. the rate at which Tristan paid interest to Tristan Noteholders).

Table 4.4: Quantification of excess interest charged onto TNG and KPM by Tristan (all amounts in USD)

	KPM			TNG		
Year ended 31 December	Interest per financial statements	Notional interest at 10.5% p.a.	Difference	Interest per financial statements	Notional interest at 10.5% p.a.	Difference
2006	88,250	86,301	1,949	532,442	520,685	11,757
2007	7,092,986	4,277,671	2,815,315	40,536,868	24,332,096	16,204,772
2008	8,636,583	5,250,000	3,386,583	47,769,608	28,875,000	18,894,608
2009[104]	7,228,386	4,372,984	2,855,402	44,630,941	26,927,945	17,702,996

[101] I note that for 2006 both KPM and Tristan record the same interest as stated in Tristan's Annual Report, Combined and Standalone audited Financial Statements of Tristan, KPM and TNG for the year ended 31 December 2007, pages F-68 and F-104, Exhibit PwC-005. There is no explanation as to the apparent inconsistency of this treatment with TNG in this and other years and with KPM in other years.

[102] Interest income was subject to Kazakhstan withholding tax of 15% up to 2008 and 20% from 2009 on interest income as per Tristan's Annual Report, Combined and Standalone audited Financial Statements of Tristan, KPM and TNG for the year ended 31 December 2007, 2008 and 2009 on page F-61, Note 6, page F-57, Note 7 (calculation agreed as 15% withholding tax) and page F-68, Note 7 respectively. Exhibit PwC-005, Exhibit PwC-006 and Exhibit PwC-007 respectively.

[103] Tristan's Annual Report, Combined and Standalone audited Financial Statements of Tristan, KPM and TNG for the year ended 31 December 2007, page F-62, Note 10. Exhibit PwC-005.

[104] With respect to 2009, I note the principal of KPM's and TNG's loans to Tristan was reduced by USD 34.43 million and USD 66.24 million respectively. I note that KPM's reduction is attributable to an offset in its accounts receivable from Stadoil, Exhibit

TOTAL	**23,046,205**	**13,986,957**	**9,059,248**	**133,469,859**	**80,655,725**	**52,814,134**

Source: Appendix 4.2, Table 4.2a.

4.29 As shown in the table above, had KPM and TNG been charged 10.5% interest on their loans from Tristan (i.e. the underlying rate of interest that Tristan paid[105]), they would have accrued a combined total interest of USD 94.64 million during the period 22 December 2006 to 31 December 2009. This amount is USD 61.87 million less than the actual combined interest of USD 156.52 million accrued by KPM and TNG on these loans during this period.

4.30 I acknowledge that the above calculations do not take into account tax that would have been withheld by KPM and TNG on interest payments to Tristan, nor do they incorporate a margin to allow for the role Tristan may have played in securing the debt from external investors. In addition, I note that the first tranche of the Tristan Notes of USD 300 million was subject to a minimum of USD 12 million in arrangement fees (including consulting, legal fees, etc.), with Tristan receiving a net balance of USD 288 million from the notes issued.[106]

4.31 Notwithstanding the above point, the level of additional charges on the debt of TNG and KPM (i.e. an additional USD 61.87 million as compared to a peak underlying loan principal of USD 325 million)[107] appears disproportionate given that loan arrangement fees were only USD 12 million and in the absence of sufficient evidence to support a role or function being carried out by Tristan that would justify such a mark-up.

Payments to Perkwood

Introduction

4.32 In this sub-section, I set out my analysis of payments made by TNG to Perkwood for the purchase of plant and equipment for the LPG Plant from a third party supplier, TGE. Figure 4.4 below illustrates the cashflows associated with the purchase of plant and equipment by TNG that I have been able to establish from the bank and accounting data provided to me.

PwC-053, whereas TNG's reduction is attributable to a combination of cash payments during 2009 (i.e. USD 27.9 million in TNG's Bank statements for account #KZ289261401110550011, Exhibit PwC-052) and an offset against accounts receivable from General Affinity of USD 38.34 million, Exhibit PwC-054. I have calculated the notional interest after taking into account the reductions in principal. For 2009, I have calculated daily interest and have made adjustments to the principal based on the transaction dates for the cash payments by TNG per TNG's Bank statements for account #KZ289261401110550011, ExhibitPwC-052, for the offsets against accounts receivables in TNG's and KPM's 1C ledgers, Exhibits , Exhibits PwC-053 and PwC-054 respectively.

[105] Tristan prospectus for issue of Tristan Notes, front page. Exhibit PwC-013.

[106] Rietumu Bank statements of Tristan: USD 288,020,521.02 receipt recorded on 22 December 2006. Exhibit PwC-051.

[107] Tristan's Annual Report, Combined and Standalone audited Financial Statements of Tristan, KPM and TNG for the year ended 31 December 2007, page F-62, Note 10. Exhibit PwC-005.

Figure 4.4: Overview of key cash flows for the purchase of TGE Equipment by TNG

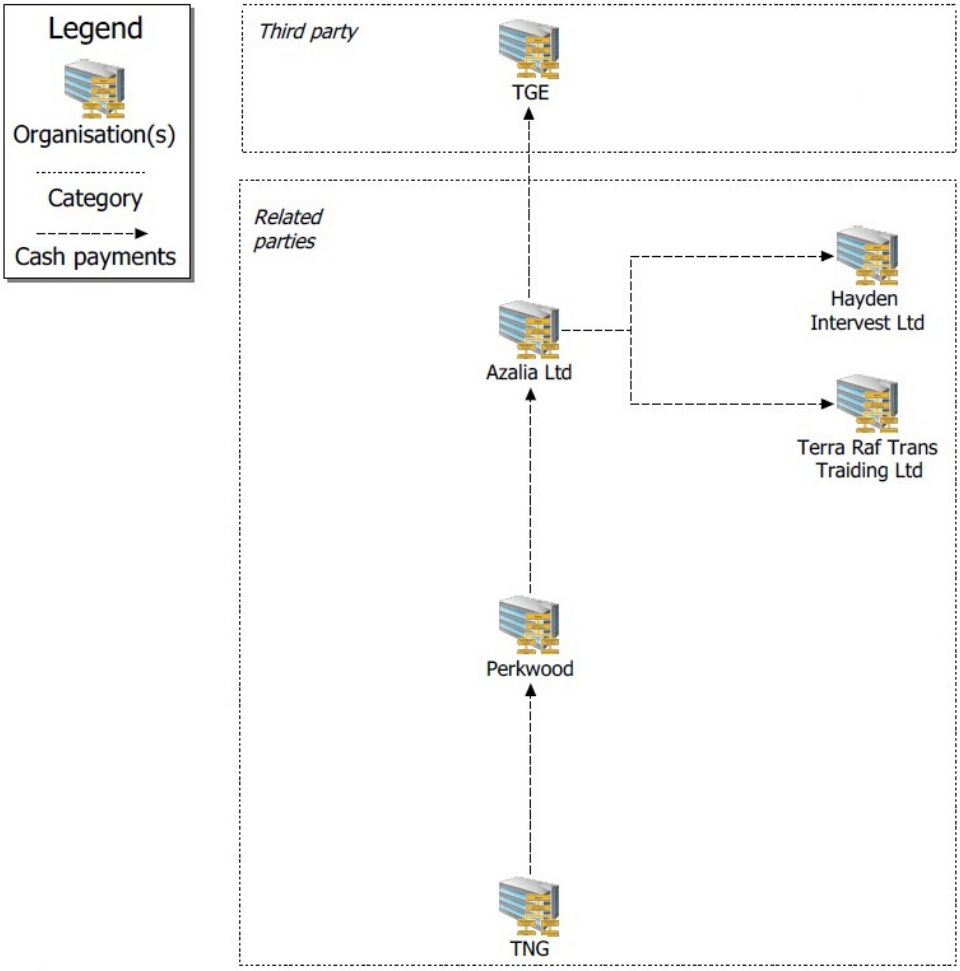

Source: Rietumu Bank statements for Perkwood, Azalia, Terra Raf and Hayden. Exhibits PwC-042, PwC-021, PwC-049, PwC-033.

4.33 As can be seen from the figure above, rather than purchase plant and equipment for the LPG Plant directly from the third party supplier, TGE, TNG instead entered into a sale and purchase agreement with Perkwood and made payments to Perkwood (a related party), who then made payments to Azalia (another related party), who then in turn made payments to the third-party, TGE.

Calculation of the additional charges to TNG for the LPG Plant equipment purchased from TGE

4.34 As set out in Section 3, it is one of the Republic of Kazakhstan's allegations against the Stati Parties that the payments made by TNG to Perkwood (and, under the structure set out above, Azalia) were fraudulently inflated. In order to assess whether Perkwood charged inflated amounts to TNG, I have reviewed the bank statements provided to me for Perkwood and Azalia (who both held bank accounts at Rietumu Bank in Latvia), and the TNG underlying accounting records, to quantify (i) the amounts paid by TNG to Perkwood; (ii) the amounts paid by Perkwood to Azalia; (iii) the amounts paid by Azalia to TGE; and (iv) based on the preceding three steps, the difference between the amount that TNG paid to Perkwood for the LPG Plant and related costs and the amounts that were ultimately paid to TGE.

4.35 Perkwood's bank statements show total cash receipts from TNG of USD 175.1 million (USD 95,739,587 and EUR 63,539,103 in payment currencies) for LPG Plant costs.[108] I note that this amount is slightly different to the LPG Plant costs recorded in TNG's Bank statements of USD 95,740,120 and EUR 63,539,773.[109] I have been unable to establish the reason for these minor differences in EUR and USD amounts. Azalia's bank statements show gross cash receipts from Perkwood of USD 174.5 million.[110] [111]

4.36 Of the USD 175.1 million paid by TNG to Perkwood (and which Perkwood then paid on to Azalia's bank account at Rietumu Bank in Latvia), I understand that USD 115.0 million[112] relates to costs charged by Perkwood to TNG for the LPG plant and equipment that was purchased from TGE. I have also been able to establish that Azalia then paid USD 34.2 million of this amount to TGE[113]. Table 4.5 below summarises the findings from my review.

---

[108] Rietumu Bank Statements of Perkwood, Exhibit PwC-042.

[109] TNG's Bank statements for accounts # KZ399261401110550007 (payments denominated in EUR) and KZ719261401110550013 (payments made in USD). Exhibits PwC-055 and PwC-056.

[110] I note that Azalija paid back to Perkwood USD 10,240,949 (USD 1,490,100 and EUR 6,199,800) in 2007-2009. In the absence of access to the accounting records for the companies in the figure above, I have been unable to establish the basis for the flow of payments and refunds, and therefore did not adjust Perkwood payments to Azalija for these refunds. Rietumu Bank statements of Azalija, see Appendix 4.5.

[111] I note that of the amounts transferred from Perkwood to Azalia, a number of the receipts were transferred directly back out, on the same day, to Hayden. In total, over the period 2006 to 2009, Azalia made total net payments to Hayden of USD 53.0 million. See Appendix 4.5.

[112]Sales and Purchase Agreement No. 01/01_TNG_PRK between TNG and Perkwood dated 17 February 2006 with amendments and appendices, page 223. Exhibit PwC-057. I understand that the relevant costs in this agreement for the plant and equipment to be purchased from TGE are those in Appendix 2 (which have a value of USD 93.1 million) and the first three items in Appendix 14 (which have a total value of USD 21.9 million). I understand that these items were paid for by TNG as part of its total payments to Perkwood that I have identified, and which are discussed in this report. See Exhibits PwC-016 and PwC-017 for details.

[113] I have identified direct cash payments made by Azalia to TGE total USD 17.7 million, which equates to approximately half (50.6%) of the total expected USD 35 million cost of the plant from TGE. My further review of Azalia's bank statement shows that on 3 May 2006 a payment of USD 16.6 million was made using the reference "Cash cover". I understand that this USD 16.6

Table 4.5: Quantification of the cash flows in relation to the purchase of plant and equipment from TGE (USD)

	Amount (USD millions)
Amount paid by TNG to Perkwood for plant and equipment from TGE	115.0
Amount paid by Perkwood to Azalia for the purchase of equipment from TGE[114]	115.0
Amount paid by Azalia to TGE for the purchase of equipment	34.2

Source: Exhibits PwC-057, PwC-016, PwC-017, PwC-021.

4.37 It therefore appears that TNG was charged USD 115.0 million for plant and equipment purchased (via Perkwood and Azalia)[115] from TGE for USD 34.2 million. In other words, the amounts charged by Perkwood to TNG were USD 80.8 million (136%) higher than the amounts charged by the third party supplier, TGE, providing the plant and equipment.

4.38 I understand that in a number of their defences / pleadings, the Stati Parties have alleged that an element (c. USD 44 million) of the amounts paid by TNG to Perkwood was for a 'management fee'. However, I have not identified any references to 'management fee' payments (or equivalent) in the bank or accounting ledger data that I have reviewed for the purposes of this report.

4.39 As noted above, and as illustrated in Figure 4.4, TNG made further payments (which, including the payments in relation to plant and equipment from TGE, totaled USD 175.1 million) to Perkwood, which were then (via Azalia) paid on to a combination of other third parties and other related parties. For the purpose of this report I have been instructed to review the information provided to me to assess whether there is evidence that monies paid by TNG to Perkwood, and ultimately Azalia, were paid on to Hayden.

---

million was paid to TGE through a documentary letter of credit issued by Rietumu Bank to a German bank with TGE being its beneficiary. The total cash payments made by Azalia to TGE including the "Cash Cover" therefore amount total USD 34.2 million. I have not been able to trace the remaining USD 0.7 million difference to the USD 35 million noted above. Exhibit PwC-021.

[114] As noted in paragraph 4.35 above, I have been able to establish that TNG paid USD 175.1 million to Perkwood for plant and equipment and that Perkwood then paid USD 174.5 million to Azalia. Given these amounts are material, for the purposes of the analysis presented in this table, it therefore appears that all of the monies paid by TNG to Perkwood for plant and equipment to be purchased from TGE were then also passed on by Perkwood to Azalia.

[115] Exhibit PwC-057, Page 12.

4.40 My analysis of Azalia's bank statements shows that, over the period 2007 to 2009, Azalia made net payments to Hayden's bank account at Rietumu Bank in Latvia of USD 52.8 million.[116] Given the range of cash inflows and outflows that Azalia received from and paid to Hayden over this period, and given the other cash in-flows that Azalia received from other entities, it is not possible to trace the entirety of this net amount of USD 52.8 million to individual payments received by Azalia from Perkwood. However, from my review of Azalia's and Perkwood's bank statements over the period 2007 to 2009, I note that there are numerous days on which TNG made a payment to Perkwood and then, on the same day or within a week, Perkwood transferred the same amount to Azalia, and again, on the same day or within a week, Azalia transferred the same amount to Hayden. The total value of such transactions that I have identified from Azalia's bank statements over the period 2007 to 2009 is USD 67.4 million.[117] These amounts would therefore appear to be amounts ultimately received by Hayden which were originally paid by TNG to Perkwood for TGE plant and equipment.

TNG intercompany loan offset

4.41 I have also undertaken a review of the TNG accounting records provided to me to establish how TNG accounted for the costs of the plant and equipment purchased for the LPG Plant. From this review, I note that, as explained above, TNG received loans from Tristan to finance the LPG Plant construction. In turn, TNG paid to Perkwood, cash and cash advances for the LPG Plant. As a result, TNG recorded a loan payable balance to Tristan in its accounts and, in respect of the cash advances, a loan receivable balance from Perkwood.

4.42 I understand that Perkwood was required to repay the principal amount of the loan to TNG.[118] However, I note from the underlying records provided to me that Perkwood did not repay the loan TNG by way of a cash transfer. Instead TNG debited (meaning reduced) the loan payable to Tristan and credited (meaning also reduced) the receivable from Perkwood. This process appears to have been used to "repay" the loan interest and loan principal payable to Tristan, without any transfer of cash (the value of this offset was USD 36.8 million).[119]

---

[116] See Appendix 4.5.

[117] See Appendix 4.5

[118] Letter to Mr Lungu from E.Calancea, the General Director of TNG, for offset of cash paid to Perkwood and loans payable to Tristan Oil Ltd. Sales and Purchase Agreement No. 01/01_TNG_PRK between TNG and Perkwood dated 17 February 2006 with amendments and appendices, Exhibit PwC-057.

[119] Tristan's Annual Report, Combined and Standalone audited Financial Statements of Tristan, KPM and TNG for the year ended 31 December 2009, page F-174, Note 31 (c). Exhibit PwC-007.

Conclusion

4.43 My review has identified a total of USD 175.1 million paid by TNG to Perkwood, of which USD 115.0 million was for the purchase of plant and equipment for the LPG Plant from TGE, a third party supplier. Only USD 34.2 million was ultimately paid to the TGE. Accordingly, TNG appears to have been charged USD 80.8 million more by Perkwood (and Azalia) for the plant and equipment that was purchased from TGE, an apparent mark-up of around 136%. The scale of the amounts paid to related parties (some USD 115 million) would appear disproportionate to the underlying value of the plant and equipment purchased from TGE (USD 34.2 million). I have been unable to establish a commercial basis to explain why the payments by TNG to related parties for the purchase of plant and equipment for the LPG Plant were almost three times the cost of the equipment charged by the third party providing it.

4.44 I understand that Perkwood was a dormant company with no employees.[120] In such a situation, it is not clear to me how Perkwood could have performed any role to justify a mark-up on the plant and equipment purchased from TGE, much less a mark-up of such a magnitude.

Dividend payments

4.45 In this sub-section, I set out my analysis of the dividend payments made or received by KPM and TNG and other related parties. Table 4.6 below shows the dividend payments that I have identified from my review of the bank statements provided to me.

Table 4.6: Summary of dividends identified in bank statements

Amounts in USD	Recipient				
Dividend Issuer	**Ascom Group Limited[121]**	**Hayden Intervest Ltd**	**"Victor Terente"**	**"Aleksandru Valerevich Cheban"[122]**	**WSR Division USA Corp**
KPM	21,589,506	-	-	-	-
Bert Management	-	-	-	-	1,650
Getter	-	-	1,288,000	2,000	-
Kaspy Asia Service Company LLP[123]	-	3,569,910	-	-	-

Source: Rietumu Bank statements of Ascom Group Limited, Hayden, Getter, Bert Management. Exhibits PwC-018, PwC-033, PwC-032, PwC-023.

[120] Defendant's Points of Claim in the English High Court, paragraph 2 (2), Exhibit PwC-016.

[121] I note that Ascom Group Limited is not a shareholder of KPM and I have been instructed that it is control by Stati Parties. According to Rietumu Bank statements the Ascom Group Limited is located in the BVI, while Ascom S.A, 100% owner of KPM, is registered in the Republic of Moldova.

[122] Actual name noted as "Cheban Aleksandru Valerevich", Exhibit PwC-032.

[123] This entity has also been translated into English as "Caspy Asia" or "Caspi Asia" in other transactions.

4.46 As shown in the table above, I have identified USD 1.3 million being paid to "Vitor Terente". This amount consisted of 19 payments to "Victor Terente" with an average size of USD 68,000 per payment. The descriptions for these payments contained the words "*dividend*" and in some instances the word "*salary*". I have not been able to determine who "Victor Terente" is nor why he would be in receipt of dividends and salaries from Getter. Similarly, I have not been able to establish the basis for the payments to Hayden Intervest Ltd, "Aleksandru Valerevich Cheban" and WSR Division USA Corp shown in the table above.

4.47 I have been able to reconcile the KPM dividend shown in the table above to two transactions recorded in KPM's accounting ledger on 15 February 2007 and 16 February 2007 totaling USD 21.6 million.[124] I did not identify any dividend payments in TNG's accounting ledger.

4.48 I note that KPM declared a USD 25 million dividend to its parent company, Ascom SA, on 18 April 2006 and paid it on 15 February 2007. [125] The KPM accounting records provided to me record that USD 25 million was received by KPM from Stadoil in the same week that this dividend was paid.[126] In Stadoil's bank statements, there is no direct payment to KPM of USD 25 million. However, I note that Stadoil's bank statements show four payments to KPM on 13 February 2007 and 15 February 2007 for a total amount of USD 25.0 million.[127] On the same dates, I note that Terra Raf made two payments to Stadoil for a total amount of USD 25.0 million.[128]

4.49 Ascom SA is ultimately owned by Mr A Stati[129] and immediate family[130], and indeed KPM itself is 'ultimately controlled by Anatol Stati'[131]. The withholding tax in respect of the above dividends is recorded in KPM's ledger as Kazakhstan Tenge ("**KZT**") of KZT 472,500,000, which approximates to USD 3.8 million.[132] Taken with the above dividend payment of USD 21.6 million, the difference between the total of USD 25.4 million and the actual dividend declared of USD 25 million is likely to be due to exchange differences.

---

[124] Extract from KPM's 1C Ledgers with transactions between KPM and Ascom S.A., Exhibit PwC-058.

[125] Tristan's Annual Report, Combined and Standalone audited Financial Statements of Tristan, KPM and TNG for the year ended 31 December 2007, page F-97, Note 19: Share capital. Exhibit PwC-005.

[126] KPM's 1C Ledgers, Exhibit PwC-058 and Exhibit PwC-090.

[127] Rietumu Bank statements for Stadoil. Exhibit PwC-047.

[128] Rietumu Bank statements for Terra Raf. Exhibit PwC-049.

[129]Tristan prospectus for issue of Tristan Notes, page 4. Exhibit PwC-013.

[130]Combined and Standalone audited Financial Statements of Tristan, KPM and TNG for the year ended 31 December 2006, page F-56. Exhibit PwC-004.

[131] Tristan's Annual Report, Combined and Standalone audited Financial Statements of Tristan, KPM and TNG for the year ended 31 December 2007, page F-77. Exhibit PwC-005.

[132] Translated to USD using National Bank of Kazakhstan's exchange rate as at 14 February 2007 of KZT:USD 124.18, the date it was recorded in KPM's 1C Ledger.

4.50 I note that the actual recipient of the dividend paid by KPM was not Ascom SA, but instead another related party, namely Ascom Group Limited.[133] Ascom S.A., KPM's parent, is registered in Moldova,[134] whereas Ascom Group Limited's[135] address is in the British Virgin Islands.[136]

4.51 My review shows that following the dividend payment from KPM to Ascom Group Limited there were a number of subsequent payments around a group of related parties. Figure 4.4 below illustrates these payments from Ascom Group Limited using the dividend paid from KPM.

Figure 4.4: Overview of dividend cash transfer throughout the group

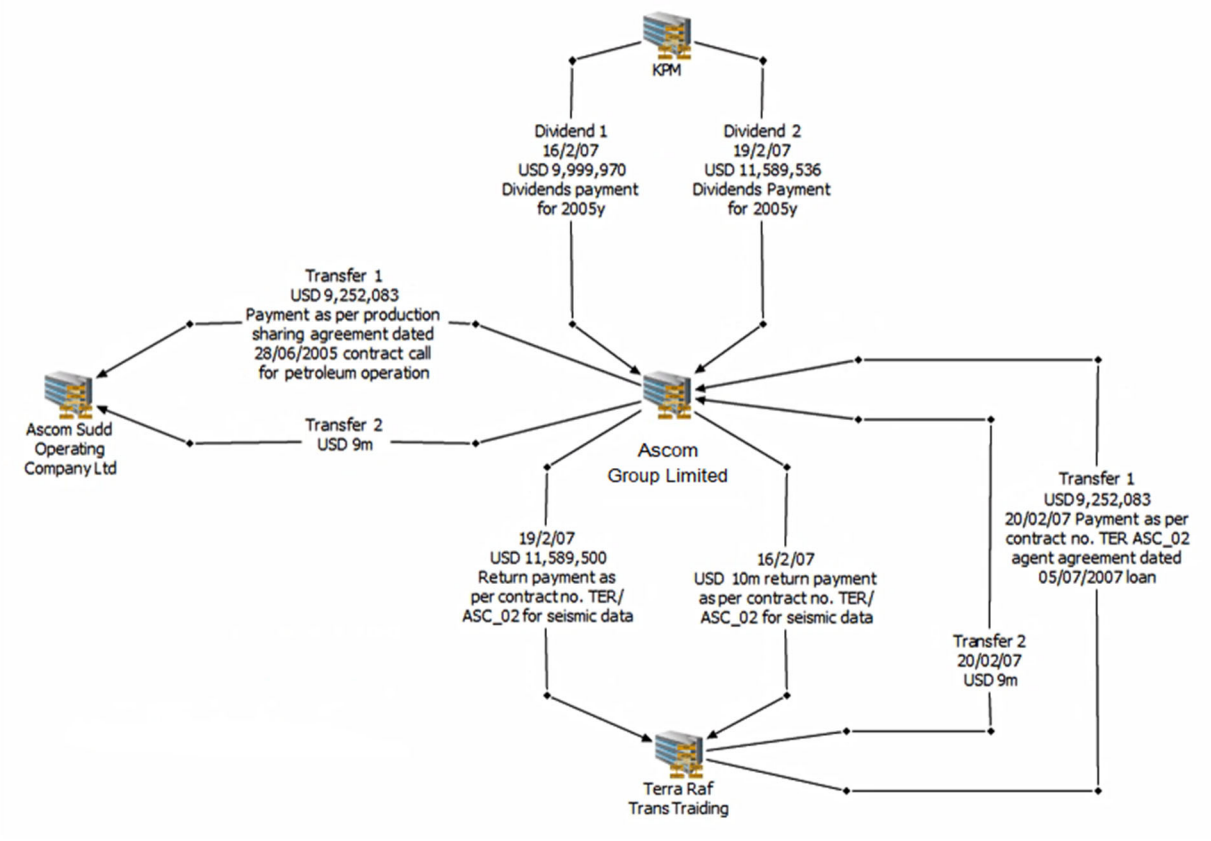

Source: Rietumu Bank statements of Ascom Sudd Operating Limited, Ascom Group Limited and Terra Raf. Exhibits PwC-020, PwC-049 and PwC-018.

[133] Rietumu Bank statements of Ascom Group Limited, Exhibit PwC-018.

[134] Tristan's Annual Report, Combined and Standalone audited Financial Statements of Tristan, KPM and TNG for the year ended 31 December 2007, page F-97. Exhibit PwC-005.

[135] I am instructed that this entity is a related party.

[136] Rietumu Bank statements of Ascom Group Limited, Exhibit PwC-018.

4.52 The above figure shows how the dividends paid by KPM in two instalments to Ascom Group Limited match two payments made by Ascom Group Limited to Terra Raf on the same dates. These payments appear to be re-circulated back to Ascom Group Limited, who then pays onwards to Ascom Sudd Operating Company Limited, which is a company with an address in the British Virgin Islands[137] that I understand may have operations in Sudan.[138] In the absence of access to the accounting records for the companies in the figure above, I have been unable to establish the basis for the flow of payments illustrated.

2009 Proposed Dividends

4.53 I have identified two proposed dividends of USD 44.6 million and USD 16.5 million in KPM's 2009 accounting records.[139] These declared dividends were correctly recorded in KPM's accounting records as a reduction in retained earnings (reserves). However, the dividends declared were not paid out and KPM's accounting records instead show that the proposed dividends were offset against a debtor balance due to KPM from Stadoil.[140] This accounting treatment effectively results in the dividends being used to reduce cash payments that KPM would have otherwise been entitled to receive from Stadoil for sales made to Stadoil. I do not know if any formal right of offset had been established for these transactions (and other apparent offsets discussed in this report). I therefore do not know if a right existed for these offsets.

4.54 I have reviewed KPM's financial statements for 2009 to understand further these proposed dividend payments and note the following:

- KPM had retained earnings of USD 72 million[141] as at 31 December 2009.

---

[137] Rietumu Bank statements of Ascom Sudd Operating Limited, Exhibit PwC-020.

[138] The Bureau of Industry and Security (BIS) of the U.S. Department of Commerce publication: Federal Register / Vol. 83, No. 56 / Thursday, March 22, 2018 / Rules and Regulations (https://www.govinfo.gov/content/pkg/FR-2018-03-22/pdf/2018-05789.pdf). I note the link referenced here refers to a company called "Ascom Sudd Operating Company". I have been unable to establish if this is the same legal entity as "Ascom Sudd Operating Company Limited".

[139] Tristan's Annual Report, Combined and Standalone audited Financial Statements of Tristan, KPM and TNG for the year ended 31 December 2009, page F-113, Exhibit PwC-007. KPM's 2009 financial statements record that a dividend of USD 52.6 million was declared during the year, and a further dividend of USD 19.3 million was declared *"subsequent to the reporting date"* of 31 December 2009[139]. These dividends are reported inclusive of withholding tax of 15%, and when this is deducted both agree to the USD 44.6 million and USD 16.5 million that I have reviewed in KPM's financial ledger.

[140] Tristan's Annual Report, Combined and Standalone audited Financial Statements of Tristan, KPM and TNG for the year ended 31 December 2009, page F-118. Exhibit PwC-007.

[141] Tristan's Annual Report, Combined and Standalone audited Financial Statements of Tristan, KPM and TNG for the year ended 31 December 2009, page F-113. Exhibit PwC-007.

- The declaration or payment of dividends by KPM was prohibited as these were classified as "*Restricted payments*" in accordance with the list of Covenants in the Tristan Oil Notes Indenture[142].
- The 2009 financial statements of KPM disclose the non-compliance with this covenant and note that management were in the process of negotiating a waiver with the Trustees[143].
- I have not reviewed any further documents that confirm whether or not the above waiver was granted but I note that if this waiver was denied, the dividends declared would have been prohibited.

Conclusion

4.55 I have identified total dividend payments of USD 21.6 million[144] paid by KPM to Ascom which resulted in money being extracted from the central group of KPM and TNG to other Stati related parties.

4.56 I also note that KPM's accounting for the dividend it declared in 2009 meant that this declared dividend was offset against USD 61.1 million cash due from Stadoil. Whilst this transaction does appear to have been disclosed as a related party transaction in KPM's financial statements,[145] I highlight it in this report as the proposed dividend to Ascom has essentially been used to directly offset sales receipts which would otherwise have been receivable by KPM from Stadoil.

Salaries and other charges

Payments from Terra Raf to the Stati family

4.57 In accordance with my instructions, I have quantified the value of payments made from Terra Raf's bank accounts to Mr A Stati, and Victor Stati, assumed to be a family member, as well as the Stati household. To do this, I ran the search term "*Stati*" across the full set of Terra Raf bank statements provided to me. My findings are summarised in Table 4.7 below.

Table 4.7: Summary of payments from Terra Raf to Stati family members

---

[142] 2006 Indenture, Exhibit PwC-009.

[143] Tristan's Annual Report, Combined and Standalone audited Financial Statements of Tristan, KPM and TNG for the year ended 31 December 2009, page F-121, Exhibit PwC-007: "*At December 31, 2009 and subsequent to this date[KPM] declared dividends which are prohibited under the terms of the Senior Secured Notes Indenture Agreement signed between Tristan Oil Ltd., Tolkynneftegaz LLP, the Company and Wells Fargo Bank, N.A ("the Trustee"). As a result of this non-compliance the Trustee or noteholders of at least 25% in aggregate principal amount of the notes outstanding may declare all the Notes to be due and payable immediately. Management of the ultimate controlling party is in the process of negotiation to get the corresponding waiver from the Trustee as part of its discussions on sale of the Company (Note 30) and is confident that such waiver will be received.*"

[144] Rietumu Bank statements of Ascom Group Limited, Exhibit PwC-018.

[145] Tristan's Annual Report, Combined and Standalone audited Financial Statements of Tristan, KPM and TNG for the year ended 31 December 2009, page F-118. Exhibit PwC-007.

Year	Anatolie Stati	Victor Stati	Gabriel Stati	Gospodaria Stati	Larisa Stati	Natalia Stati	Nicoleta Stati	Stati - unknown[146]	Total
2002	38,640	42,000	-	-	-	-	-	-	80,640
2003	42,602	56,500	99,100	-	-	-	-	-	198,202
2004	232,638	47,170	-	10,000	-	-	-	-	289,808
2005	339,695	42,500	69,630	-	-	-	-	-	451,825
2006	587,540	19,084	-	-	32,000	11,610	-	50,908	701,142
2007	4,441,326	12,575	-	-	53,600	-	119,470	-	4,626,971
2008	465,495	-	-	-	-	-	-	-	465,495
2009	123,893	-	-	-	-	-	-	-	123,893
2010	110,022	-	-	-	-	-	-	-	110,022
2011	5,720	-	-	-	-	-	-	-	5,720
Total	**6,387,571**	**219,829**	**168,730**	**10,000**	**85,600**	**11,610**	**119,470**	**50,908**	**7,053,718**

Source: Appendix 4.3, Table 4.3a(i)

4.58 As shown in the table above, I have been able to identify USD 7.05 million as payments made directly to or on behalf of[147] Stati family members, of which USD 6.4 million was made to or on behalf of Mr A Stati. Of the payments made to Mr A Stati, USD 4 million appears to relate to property, based on the bank statement descriptions, while USD 1.2 million of the payments have the reference "*card*" in them, and appear to relate to credit card payments, and they are accompanied by text such as "*transfer for platinum card*", "*transfer to gold card*".

4.59 My review of TNG's accounting ledger has also identified a payment made to Mr G Stati of USD 15,439 in 2007 in respect of a petty cash payment for a Mercedes vehicle.

Tristan bonus payments to Anatoli Stati

4.60 In accordance with my instructions, I have also analysed the accounting records provided to me to quantify any bonus payments made by Tristan to Mr A Stati. As shown in Table 4.8 below, I have identified a total of USD 8,363,800 of payments from Tristan's bank accounts in the period from 23 September 2008 to 22 September 2009, which relate to salary / bonus payments made to Mr A Stati.

Table 4.8: Payments from Tristan's bank account to Mr A Stati

Description of payments made in respect of Mr A Stati	Total
Salary and/or bonus to A Stati – Terra Raf	8,284,000
Salary and/or bonus to A Stati	50,000
"Fan transfer" platinum Mastercard	65,800

[146] This relates to a USD 50,908 payment from Terra Raf to "Rolls-Royce Motor Cars" on 03/10/2006 referencing "*STATI*" in the narrative.

[147] For example, payments made to external accounts with Stati family members referenced in the narrative.

Total	**8,363,800**

Source: Rietumu Bank statements of Tristan, Exhibit PwC-051.

Tristan share capital

4.61 In accordance with my instructions, I have also reviewed the accounting information provided to me to quantify the amounts that Mr A Stati (as the sole shareholder of Tristan) contributed in respect of Tristan's share capital. I note from the Tristan prospectus for the Tristan Notes that the nominal value of Tristan's share capital of USD 5 million was, at July 2007, "*still to be paid up*". [148] A review of Tristan's bank statements for incoming payments in respect of this outstanding share capital contribution from Mr A Stati shows a single cash receipt of USD 5,000, which was a transfer from Terra Raf, and was a described as a "*contribution to authorized and issued capital on behalf of Mr. Stati Anatol*"[149]. Tristan's financial statements for 2007 explain that the USD 5 million of share capital recorded was in fact a prior period error, and that this amount *"should have been USD 5,000"*[150]

4.62 I have not been able to establish why Terra Raf settled Mr A Stati's liability to Tristan for the outstanding share capital.

Sundry Stati related expenses

4.63 In accordance with my instructions, I have also reviewed the bank statements provided to me to identify any other sundry payments related to the Stati Parties. The findings of my review are set out in the table below.

Table 4.9: Sundry Stati related expenses, all amounts in USD

Payment type	2005	2006	2007	2008	2009	2010	Total
Credit card payments	178,463	489,930	520,288	983,500	754,200	577,702	3,504,083
Financing	4,267,600	2,289,484	16,575	27,500	36,000	6,000	6,643,159
Motor vehicles	422,730	50,908	278,831	-	-	-	752,469
Other	(5,020)	-	48,470	-	2,000	-	45,450
Payment of debt	166,252	129,610	229,012	430,494	123,893	12,820	1,092,081
Property	-	-	4,031,626	15,595	-	-	4,047,221
Representatives	-	25,000	60,000	-	-	-	85,000
Salary	-	-	-	-	50,000	-	50,000
Sponsorship	-	-	-	63,160	-	-	63,160
Travel / accommodation	-	11,610	-	24,584	14,971	48,458	99,623
Total	**5,030,025**	**2,996,542**	**5,184,802**	**1,544,833**	**981,064**	**644,980**	**16,382,246**

[148] Tristan prospectus for issue of Tristan Notes, page 27. Exhibit PwC-013.

[149] Rietumu Bank statements of Terra Raf, Exhibit PwC-049.

[150] Tristan's Annual Report, Combined and Standalone audited Financial Statements of Tristan, KPM and TNG for the year ended 31 December 2007, page F-56, Note 3. Exhibit PwC-005.

Source: Appendix 4.3, Table 4.3b(i)

4.64 As shown in the table above, the total net cash payments identified from my review of the bank statements provided to me, for the period from 1 January 2005 to 31 December 2010, amounted to USD 16.3 million.[151] Of this amount, USD 4 million was in respect of property, USD 3.5 million was paid in respect of Stati credit cards, and there were payments of USD 6.6 million in respect of financing. I have no further information on these transactions and the descriptions referred to above are those that I have identified in the bank statements provided to me. I have not been provided with copies of bank statements for KPM and TNG and therefore have been unable to perform a similar analysis for any such payments which may have also been made by KPM and TNG.

Payroll Petty Cash Transactions

4.65 In accordance with my instructions, I have reviewed the accounting records provided to me to identify the value of any payroll payments being made from petty cash. From this review, I note that KPM made significant payments through its petty cash account, with most of these expenses relating to the payment of payroll expenses. In total KPM paid net payroll expenses from petty cash of USD 3.34 million, USD 3.39 million and USD 2.11 million during 2007, 2008 and 2009 respectively.[152]

4.66 Like KPM, TNG also made significant net payroll payments out of petty cash. I note that from 2007 to 2009, TNG made payroll payments of USD 3.16 million, USD 4.74 million and USD 3.38 million respectively from petty cash.[153]

4.67 I have undertaken a search of the above payments and note that none of descriptions in the accounting records for these payments include references to members of the Stati family.

Other Related Parties payments identified during my review

4.68 My analysis of the KPM and TNG accounting data, and the bank statements, provided to me shows that there are at times discrepancies in the beneficiaries related to certain payments, whereby the beneficiary in the accounting records does not agree with that in the bank statements. These transactions are therefore not correctly disclosed in the related party transaction notes, as these only record the beneficiary per KPM's and TNG's accounting records, and not the actual recipient of the cash. Tables 4.10 and 4.11 below set out these payments in respect of KPM and TNG respectively.

[151] I note that this amount includes the same amounts for 2005 to 2010 which are shown in Table 4.7 above.

[152] Appendix 4.4, Tables 1 and 1.1.

[153] Appendix 4.4, Tables 1 and 1.2.

Table 4.10: KPM transactions which have different beneficiaries between accounting records and bank statements

Purpose of payment	Beneficiary in accounting records	Beneficiary in bank statements	Year	Amount, USD
Long-term and short-term interest payable	Ascom SA	Terra Raf	2007-2009	16,711,682

Source: Extract from KPM's 1C Ledgers with journal entries and transactions between KPM and Ascom S.A. and KPM's Bank statements for account #KZ559261401107068001. Exhibits PwC-058 and PwC-059.

Table 4.11: TNG transactions which have different beneficiaries between accounting records and bank statements

No	Year	Debit per 1C	Credit per 1C	Actual recipient per the bank statement	Amount, USD
1	2007	Short-term interest payable to Ascom	Cash at bank- paid to Ascom	Terra Raf	8,190,069
2	2008	Loans payable to Ascom	Cash at bank- paid to Ascom	Terra Raf	53,848,054
3	2008	Short-term interest payable to Ascom	Cash at bank- paid to Ascom	Terra Raf	2,726,192

Source: Extract from TNG's 1C Ledgers with journal entries and transactions between TNG and Ascom S.A. and TNG's bank statements for accounts #KZ289261401110550011, #KZ719261401110550013, Exhibits PwC-060, PwC-052 and PwC-056.

Conclusion

4.69 Many of the transactions that I have reviewed which were undertaken by, or on behalf of, KPM and TNG seem to have been transacted with related parties, with those related parties then entering into transactions with third party suppliers. Under this structure, significant amounts of cash appear to have been redirected from KPM and TNG to those related parties. Without further information on the role, if any, that those related parties played in supporting the operations of TNG and KPM, I have been unable to establish the commercial rationale for the amounts of cash redirected from KPM and TNG to related parties. Further, I have identified numerous other examples whereby intercompany interest rates, paid and declared dividends and other accounting entries suggest that significant further funds were diverted from KPM and TNG to related parties. My review of the bank statements of related parties also shows that significant amounts of money were paid by those related parties directly to the Stati family.

4.70 Table 4.12 below summarises the value of the relevant transactions and payments that I have identified during the course of my work.[154]

Table 4.12: Summary of findings

No	Transactions with Stati Parties	USD million
1	Payment of funds from the Tristan Notes to Terra Raf and subsequent loans from Tristan to Terra Raf	118.4
	Amounts that I have been able to confirmed were transferred on to TNG and KPM	(24)
	Difference – being payments from Tristan to Terra Raf which do not appear to have been paid onwards to TNG or KPM	**94.4**
3	Quantification of excess interest charged on to TNG and KPM by Tristan	**61.9**
	KPM	*9.06*
	TNG	*52.8*
4	Additional amounts paid to Perkwood / Azalia for the purchase of plant and equipment from TGE, over and above amounts charged by TGE for the plant and equipment	**80.8**
5	Dividend payments made by KPM	**21.6**
6	Value of declared dividends used to offset trade receivables owed to KPM by Stadoil	**61.1**
7	Payments from Terra Raf bank accounts to Mr A Stati, Victor Stati and other members of the Stati family[155]	**0.6**
8	Petty cash payment to Mr G Stati	**0.0154**
9	Tristan bonus payments to Mr A Stati	**8.4**
11	Other sundry Stati related expenses identified from my review of the bank statements provided to me	**16.4**
	Total	**345.2**

[154] The table below aggregates the findings from my review. I note that not all items shown in the table below may be additive. For example, to the extent funds were diverted from KPM and TNG to other related parties and those related parties then, for example, used those diverted funds to pay monies to the Stati Parties, then this may double count the value of those specific transactions. The bank statements provided to me do not allow me to assess whether this has been the case and, in the absence of accounting records for each of the related parties, it is currently not possible for me to complete this assessment at the time of this report.

[155] The payments from 2005 to 2010 have not been included here as they are incorporated in the "Sundry Stati related expenses" at Table 4.9.

5. My review of sales proceeds received by KPM and TNG

Introduction

5.1 In this section, I set out my analysis of the financial data provided to me to assess whether there is evidence that proceeds from sales of product produced by KPM and TNG were diverted to related parties. In the sub-sections below, I first set out an overview of the key sales channels for KPM and TNG. I then set out my analysis of the related party element of these sales, before finally setting out my analysis to assess whether related party sales were used to divert monies away from KPM and TNG.

Overview of KPM and TNG reported sales

5.2 KPM's and TNG's reported sales, per their corresponding financial statements, are split between sales of crude oil and gas condensate; natural gas; and electricity. Table 5.1 below shows the reported value of sales under these categories from KPM's and TNG's financial statements.

Table 5.1: Summary of KPM's and TNG's reported sales values by channel (USD millions)

	KPM				TNG			
	2006	**2007**	**2008**	**2009**	**2006**	**2007**	**2008**	**2009**
Crude oil and gas condensates	109.8	121.6	162.7	64.5	96.6	118.5	226.7	55.7
Natural gas	0.6	1.3	1.7	1.1	29.1	46.7	115.0	55.1
Electricity	-	-	-	-	0.2	0.4	0.5	0.5
Total sales	**110.4**	**122.9**	**164.4**	**65.6**	**125.9**	**165.6**	**342.3**	**111.3**

Source: Appendix 5.1, Tables 4a and 4b.

5.3 As shown in the table above, the largest sales products for both KPM and TNG were crude oil and gas condensates and natural gas. Given the relatively small value of the electricity sales, as shown in the table above, for the purpose of this report, I have not focused further on this component of sales in my analysis.

Reconciliation of financial statements to accounting ledgers

5.4 As I explain further below, the TNG and KPM accounting data provided to me contains more granular sales price and volume data than KPM's and TNG's financial statements and it is this more granular data that I have used in order to complete my analysis in this section of my report. In order to gain comfort over the sales information included in the accounting data provided to me, I have reconciled the sales data from these accounting records to the data in KPM's and TNG's financial statements. Details of this process are set out in Appendix 5.1 to this report.

5.5 As shown in Appendix 5.1, the sales values stated in KPM's financial statements are materially the same as those recorded in KPM's accounting records for all three products for 2007 and 2008. The largest difference is for sales of crude oil and gas condensate, whereby sales per the accounting records are USD 5.6 million higher than in the audited financial statements. This equates to a difference of 8%. I have been unable to establish the reason for this variance.

5.6 The sales data from TNG's accounting records and as disclosed in TNG's audited financial statements for 2007 and 2008 for crude oil and gas condensate and natural gas are the same or with relatively minimal differences. TNG's revenue generated from sales of crude oil and gas condensate for 2009 is 7.74% lower in the audited financial statements compared with the revenue balance recorded in its accounting records. I have been unable to establish the reason for these variances between the accounting data provided to me and TNG's audited financial statements.

5.7 Whilst there are therefore differences between the accounting data provided to me and KPM's and TNG's audited financial statements, these differences are relatively immaterial and limited to a specific number of years. In the absence of any further details to explain these differences, I have therefore used the KPM and TNG accounting records for the purposes of my analysis below.

Identification of related party sales by TNG and KPM

5.8 I have used the sales volume data contained in TNG's and KPM's accounting records to establish the proportion (by volume) of sales that were made by KPM and TNG to related parties. This analysis is shown in Table 5.2 below.

Table 5.2: Review of KPM and TNG sales to related parties, based on sales volumes

	2007	2008	2009
TNG's crude oil and gas condensate sales to related parties, thousand bbl	1,740	2,702	1,125
KPM's crude oil and gas condensate sales to related parties, thousand bbl	1,898	1,978	1,284
Total crude oil and gas condensate sales to related parties, thousand bbl	**3,638**	**4,679**	**2,408**
% of total total crude oil and gas condensate sales	***98%***	***100%***	***83%***
Natural gas sales to related parties, million cf	25	19	23
% of total natural gas sales	***0%***	***0%***	***0%***

Source: Appendix 5.1.

5.9 As shown in the table above, virtually all crude oil and gas condensate sales were made through related parties. Conversely, virtually all natural gas sales by KPM and TNG were made to third parties (the table above shows 100% and 0% due to rounding, and I note that there were some very minor sales of crude oil and gas condensate to related parties). Accordingly, given the focus of this section of my report on the impact of sales to related parties, in the remaining sub-sections of this report, I only analyse the sales to related parties of crude oil and gas condensate.

Overview of the sales channels used by KPM and TNG for sales of crude oil and gas condensate

5.10 KPM's and TNG's crude oil and gas condensate sales were made almost exclusively to the export market.[156] I understand that all export crude oil and gas condensate sales made by KPM and TNG were initially made to a related party (as I explain further below), before then being sold on from the related party to a third party, Vitol S.A. ("**Vitol**").

[156] I note that very minor domestic sales of crude oil and gas condensate (totalling 7,000 barrels across 2007 to 2009) are included in the accounting ledger data that I have analysed. Given the small volume of these sales, I have not included them in my remaining analysis in this report.

5.11 In relation to the initial sales by KPM and TNG to related parties, I understand that Terra Raf and Vitol entered into Crude Oil Marketing Services Agreements ("**COMSA**")[157] in 2005 and 2006 respectively, and according to these agreements, Vitol provided marketing and transportation services to Terra Raf while Terra Raf sold TNG's and KPM's crude oil and gas condensate to Vitol. On 30 June 2007, the parties to the COMSAs entered into novation agreements whereby Montvale took over from Terra Raf its rights and obligations.[158] This meant that with effect from 1 July 2007, Montvale sold KPM's and TNG's crude oil and gas condensate to Vitol, and Terra Raf stopped doing so[159].

5.12 TNG's export sales of oil and gas condensate were first made via General Affinity Ltd ("**General Affinity**"), before passing to Terra Raf, and from July 2007 to Montvale. General Affinity, Terra Raf and Montvale were all related parties.

5.13 KPM's export sales of oil and condensate were made first via Stadoil Ltd ("**Stadoil**") before passing to Terra Raf, and from July 2007 to Montvale. Stadoil was also a related party.

5.14 Terra Raf and Montvale both ultimately then made sales to Vitol, which is a third party.

5.15 Figure 5.1 below illustrates the above export crude oil and gas condensate structure used by KPM and TNG.

Figure 5.1: Illustration of the export sales process for crude oil and gas condensate

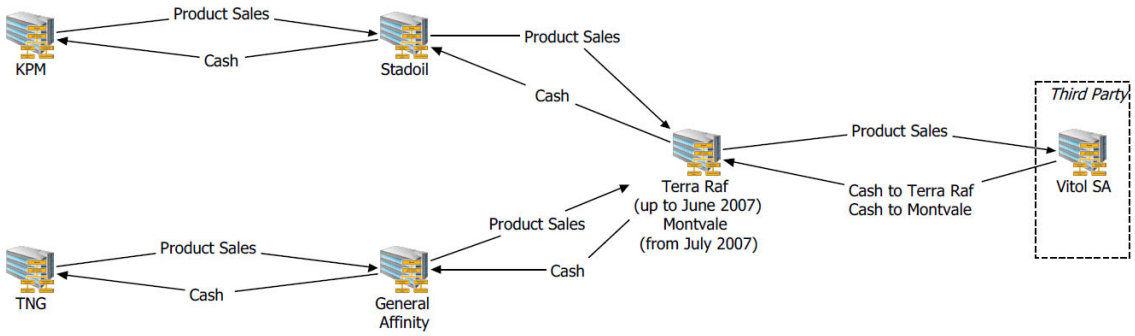

Source: Rietumu Bank statements for Stadoil, General Affinity, Terra Raf and Montvale. Exhibits PwC-047, PwC-031, PwC-049, PwC-039.

[157] Exhibits PwC-061, PwC-062, PwC-063, PwC-064, PwC-065 and PwC-066.

[158] Exhibits PwC-063 and PwC-066.

[159] Tristan's Annual Report, Combined and Standalone audited Financial Statements of Tristan, KPM and TNG for the year ended 31 December 2007, page. 5, Novation agreement relating to KPM Crude Oil and Marketing Services Agreement between Terra Raf, Montvale and Vitol S.A. dated 30 June 2007 Novation agreement relating to TNG Crude Oil and Marketing Services Agreement between Terra Raf, Montvale and Vitol S.A. dated 30 June 2007. Exhibit PwC-005, PwC-063 and PwC-066.

Quantification of the value of crude oil and gas condensate sales by related parties to Vitol

5.16 Appendix 5.1 sets out my analysis of the accounting records provided to me regarding sales made by KPM to Stadoil and TNG to General Affinity. As explained above, sales of crude oil and gas condensate made by Stadoil and General Affinity, on behalf of KPM and TNG respectively, were then made to Terra Raf (and from 1 July 2007 to Montvale). I have used the bank statements provided to me to analyse the total net cash receipts received by Terra Raf and Montvale from Vitol. This analysis is set out in Appendix 5.2.

5.17 I note that not all descriptions for the cash receipts and payments from/to Vitol (and Arkham S.A. and Vitol FSU) contained references to the particular COMSA agreement they were made under. It has therefore not been possible to match and allocate transactions without references to particular COMSAs to the sales transactions between General Affinity and TNG and Stadoil and KPM. I note that the bank statement narratives for these transactions include, *inter alia,* references to loans, interest, demurrage costs etc. Without further references on the bank statements, or without further information in respect of these payments (and access to the agreements which underlie these payments) I have been unable to establish that they directly relate to sales / transactions in respect of TNG and KPM. However, for the purposes of my analysis presented below, I have been instructed to assume that was the case.

Quantification of sales value diverted away from TNG and KPM via related parties

5.18 As Vitol paid directly to Terra Raf (and then Montvale from 1 July 2007) for crude oil and gas condensate sold on from KPM and TNG, I do not have a breakdown from the bank statements of Terra Raf as to which entity (i.e. KPM or TNG) cash receipts related. In my analysis, I have therefore apportioned Vitol's payments to Terra Raf between TNG and KPM based on number of barrels of crude oil and gas condensate sold for 2007 to 2009, where this data is available for both KPM and TNG individually in their respective accounting records. For 2006 I have taken the net cash receipts received by General Affinity, on behalf of TNG, and Stadoil, on behalf of KPM, and applied this same ratio to total cash receipts from Vitol to Terra Raf (and Montvale from 1 July 2007). I have undertaken this exercise to seek to illustrate the split of payments between KPM and TNG. However, for the purposes of this report, I conclude on this matter in aggregate and so the allocation that I describe here is not relevant to my overall conclusions in this report.

5.19 Having performed this allocation exercise, I have then compared the net cash paid by Vitol to Terra Raf (and Montvale from 1 July 2007) and the actual net cash receipts by TNG from General Affinity, and by KPM from Stadoil. The difference represents sales proceeds generated by related parties in relation to the sales of TNG and KPM products which were not passed on to TNG and KPM. Absent any explanation or commercial justification for this difference, these funds appear to have been diverted from TNG and KPM to related parties. Details of these calculations are set out in Appendix 5.2 and are summarised in Table 5.3 below.

Table 5.3 Net sales proceeds that appear to have been diverted from TNG and KPM

All amounts in USD	For the year ended 31 December						
	5M 2005	2006	2007	2008	2009	7M 2010	Total
Sales proceeds retained by related parties from KPM	43,068,455	40,773,577	383,555	58,120,994	(4,853,784)	-	137,492,797
Sales proceeds retained by related parties from TNG	-	38,929,158	7,838,000	77,187,818	(11,086,162)	12,518,527	125,387,341
Total	**43,068,455**	**79,702,735**	**8,221,555**	**135,308,812**	**(15,939,946)**	**12,518,527**	**262,880,138**

Source: Appendix 5.2

5.20 As can be seen from the table above, in total USD 262.9 million of the monies paid by Vitol for the sale of product produced by KPM and TNG were ultimately retained by related parties and did not flow directly to TNG and KPM. This compares to USD 1,095.9 million (see Appendix 5.2) which was paid by the related parties to TNG and KPM for the same products. Whilst it is not unusual to charge intercompany management fees for sales transactions, in my opinion, the amounts retained by related parties are disproportionate to the underlying value of the sales.

5.21 I have been instructed to assess whether there is evidence that sales proceeds which appear to have been retained by related parties were transferred to Hayden. As shown in my analysis in Appendix 5.2, of the monies that appear to have been retained by these related parties from sales, it appears that the majority of the amounts retained were then subsequently transferred on to Hayden and Ascom, both related parties. Specifically, I note that:

a. Terra Raf paid a net amount of USD 128.1 million to Hayden over the period of my review (albeit I note that the majority of these payments were post-2007, after Montvale had replaced Terra Raf in the sales structure illustrated in Figure 5.1, and instead these payments to Hayden appear to have been financed through transfers to Terra Raf from Tristan, KPM and TNG) and a net amount of USD 160.8 million to Ascom Group Limited.[160]

b. Montvale paid a net amount of USD 158.0 million to Hayden's account at Rietumu Bank, Latvia over the period of my review. The majority of this transfer was in 2008, when my analysis shows

[160] See Appendix 5.2.

that Montvale retained USD 138.2 million from sales made to Vitol and, in the same year, then transferred USD 138.9 million to Hayden.[161]

Conclusion

5.22 On the assumption that all payments from Vitol, Vitol FSU and Arkham S.A. to Terra Raf and Montvale were for (or in relation to) the sale of products which had been produced by KPM and TNG, my analysis of the accounting ledgers and bank statements provided to me shows that the net cash receipts from Vitol to Terra Raf and Montvale are significantly higher than the ultimate net cash receipts paid to KPM and TNG for the sale of the same oil and gas. My analysis shows that from 1 August 2005 to 31 July 2010 net cash receipts by TNG and KPM were USD 263 million less than the cash receipts received by Terra Raf and Montvale from Vitol for the corresponding sales. The amount of sales revenue that appears to have been diverted in this manner would, in my opinion, appear disproportionate to the underlying value of the corresponding sales, in the absence of any commercial basis for this retention of funds by these related parties.

[161] See Appendix 5.2. I note that Montvale also received various other cash receipts during 2008. However, my analysis of Montvale's bank statements show that these other receipts (i.e. excluding the receipts from Hayden, which are netted against the net payment figure to Hayden that I discuss above and excluding receipts from Vitol) totalled USD 3.1 million in 2008 (Rietumu Bank statements of Montvale, Exhibit PwC-039). Accordingly, it seems that the majority of the monies transferred by Montvale to Hayden in 2008 were from the sales funds from Vitol that were retained by Montvale.

6. My review of certain reporting requirements and other relevant restrictions under the 2006 Indenture

Introduction

6.1 As set out in Section 3, there were a number of restrictions and requirements set out under the terms of the 2006 Indenture, *inter alia*, as to how monies raised could be applied by KPM and TNG, and with regards to reporting requirements.

6.2 In this section, in accordance with my instructions, I comment specifically on the 2006 Indenture restrictions and requirements in relation to related party transactions and financial reporting and consider the implications of those requirements in-light of the related party transactions that I have analysed in the previous sections of this report.

6.3 As explained further below, I have been provided with certain correspondence between the Stati Parties and KPMG (the "**KPMG Correspondence**")[162], the auditors of Tristan, KPM and TNG from 2007 to 2009. I have also been instructed to comment on the implications of this correspondence on the reporting requirements under the 2006 Indenture, as well as on the broader accuracy and reliability of the financial statements of KPM and TNG.

The requirements of the 2006 Indenture in relation to the related party transactions

6.4 As set out in Sections 4 and 5 of this report, both KPM and TNG entered into numerous related party transactions between 2006 and 2009. These related party transactions included:

a. **Purchases from related parties** – as discussed in Section 4, TNG purchased equipment and plant from Perkwood, which was a related party.

b. **Interest payments to related parties** – as discussed in Section 4, KPM and TNG were charged additional interest (i.e. over and above the underlying interest on the Tristan Notes) by a related party, Tristan.

[162] A copy of this correspondence is included at Exhibit PwC-067.

c. **Dividend payments to related parties** – as discussed in Section 4, KPM declared a number of dividends to related parties. Whilst some of these dividends were paid out, others were declared but not actually paid.

d. **Sales to related parties** – as discussed in Section 5, certain sales made by TNG and KPM flowed through a series of related parties before passing to Vitol, the ultimate third party. Under this structure, the related parties appear to have retained a significant element of the sales proceeds paid by Vitol (and Arkham S.A. and Vitol FSU).

6.5 As noted above, there were a number of restrictions under the 2006 Indenture with regards to transactions with "*Affiliates*". Under the 2006 Indenture, the "*Affiliate*" of any Person is defined to mean "*any other Person directly or indirectly controlling or controlled by or under direct or indirect common control with such* [] *Person*"[163]. The 2006 Indenture defines a "*Person*" to mean "*any individual, corporation, partnership, joint venture, association, joint-stock company, trust, unincorporated organization, limited liability company or other entity*"[164]. As set out in Appendix 4.1, I have undertaken a process to identify related parties to KPM and TNG (on the basis that they were ultimately controlled or owned by the Stati parties) and on the basis of the common control / ownership of the Stati Parties, the related parties of KPM and TNG would therefore fall under this definition of an "*Affiliate*". The restrictions applicable to such transactions under the 2006 Indenture would therefore apply to the related party transactions discussed in this report.

6.6 Under Section 4.1[165] of the 2006 Indenture, if the aggregate consideration of a related party transactions was in excess of USD 1.0 million, the transaction was required to be on an arm's length basis (i.e. the transaction was required to be on "*terms that are no less favourable to* [Tristan] *or to* [KPM or TNG as "*the relevant guarantor*"] *than those that would have been obtained in a comparable transaction by* [Tristan] *or* [KPM or TNG] *with an unrelated Person*").

6.7 However, as set out in Sections 4 and 5 of this report, both the purchases from and sales to related parties by KPM and TNG appear to have been on terms less favourable than those that were obtained in a comparable transaction by the ultimate third parties involved. Examples of such transactions include:

a. USD 80.8 million of payments to Perkwood, a related party, in excess of the underlying amounts that Perkwood paid to third parties for plant and equipment for the LPG Plant.

b. USD 61.9 million of interest payments to Tristan, a related party, in excess of the corresponding interest amounts paid by Tristan to the third-party Tristan Notes holders.

---

[163] 2006 Indenture, page 1, Exhibit PwC-009.

[164] 2006 Indenture, page 16, Exhibit PwC-009.

[165] 2006 Indenture, page 53, sub-section headed: "*Transactions with Affiliates*". Exhibit PwC-009.

c. Sales made to Stadoil, General Affinity, Terra Raf and Montvale, all related parties, which in turn were USD 263 million lower than the value of the corresponding monies received by these related parties from third parties.

6.8 As explained in Sections 4 and 5 of this report, I have not been able to establish the role that each related party played within the group structure established by the Stati Parties. It is therefore possible that the related parties provided some form of service (e.g. as a sales and marketing agent) to justify an element of mark-up on the costs / sales to / from KPM and TNG. However, the scale of the mark-ups applied to the related party transactions appears disproportionate when compared to the underlying value of the transactions to which they relate. Further, in the case of companies such as Perkwood, as explained in Section 4, this was a shell company with no employees and there is therefore no clear reason for the scale of the mark-up that Perkwood charged on the plant and equipment for the LPG Plant.

6.9 On the basis of the work that I have performed, many of the related party transactions discussed in this report (i.e. transactions with "*Affiliates*") would therefore not appear to have been undertaken on an arm's length basis. Indeed, without justification for the value that the related parties brought to the transactions with KPM and TNG, it appears that the terms of many of the KPM and TNG transactions with related parties were significantly less favourable than KPM and TNG might otherwise have been able to obtain with third parties.

The impact of the KPMG Correspondence on the financial reporting requirements under the 2006 Indenture

Overview of the financial reporting requirements under the 2006 Indenture

6.10 For the purpose of this report, I have been provided a copy of the KPMG Correspondence between the Stati Parties and KPMG. I note that this correspondence between KPMG and the Stati Parties took place over two periods of time – one in 2016 and one in 2019.

6.11 From the 2016 KPMG Correspondence I note the following:[166]

(i) In a letter dated 15 February 2016 from KPMG to Mr Stati, KPMG informed Mr Stati that it had become aware of facts which may have caused "*the audit reports to be amended, had such facts been known to us at the audit report date.*" The issues raised by KPMG included:

[166] See Exhibit PwC-067.

- queries in relation to the substance of a USD 44 million management fee charged by Perkwood to TNG[167];
- whether Perkwood was in fact a related party to TNG;
- questioning why Perkwood had charged TNG for equipment for the LPG Plant at a level which was significantly different to the actual supplier costs for the equipment; and
- KPMG also noted that they had become aware that "*Perkwood was not an operating entity*" and that it had submitted "*dormant accounts*".

KPMG concluded this letter by stating: "*In case we receive no explanations or additional representations, we remain* [sic] *our rights to seek to prevent future reliance on our audit reports and in particular to withdraw our audit reports and to inform about such withdrawal all parties who are still, in our view, relying on these reports, included but not limited,* [sic] *Ministry of Justice of the Republic of Kazakhstan and the Svea Court of Appeals*."

(ii) In a letter dated 26 February 2016 from Mr Stati to KPMG, Mr Stati does not directly address any of the questions raised by KPMG in its letter of 15 February 2016, stating "*We expressly reserve the right to hold your firm accountable should you choose not to co-operate with us and/or proceed to withdraw your audit reports*".

(iii) In a letter dated 10 March 2016 from KPMG to Mr Stati, KPMG reiterated its audit-related inquiries of its 15 February 2016 letter.

6.12 From the 2019 KPMG Correspondence I note the following:[168]

(i) In a letter dated 5 July 2019 from HSF to KPMG, HSF informed KPMG of new evidence that they had been provided with in the form of the sworn deposition of Mr Artur Lungu, (who I understand was the former Vice-President of Tristan Oil Ltd. and Chief Financial Officer (CFO) of Ascom) from the US courts, who when asked about the relationship between TNG and Perkwood, testified under oath that *"all of the transactions between TNG and Perkwood should have therefore been disclosed as related party transactions"*. I am instructed that Artur Lungu further explicitly stated under oath in the above referenced proceedings that the representation letters from the Stati Parties' management to KPMG were materially false.

---

[167] I understand from HSF that this "*management fee*" was paid as part of the payments to Perkwood that I have analysed in Section 4 of this report. As explained in Section 4, I understand that Perkwood was a dormant company with no employees. I am instructed that it is the Republic of Kazakhstan's position that there was no basis for any management fee to Perkwood and that the amount referred to here instead relates to the excess costs for equipment from TGE that the Republic of Kazakhstan alleges Perkwood charged to TNG (see Section 4 for further details on this area).

[168] See KPMG / Stati Party correspondence, Exhibit PwC-067.

(ii) In a letter dated 5 August 2019 from KPMG to the Stati Parties, following up on the sworn testimony of the Stati Parties' former CFO, KPMG requested additional information in relation to the transactions between TNG and Perkwood in order "*... to assess the potential impact on the financial statements of the Companies, and our audit report.*"

(iii) In a letter dated 21 August 2019 from KPMG to the Stati Parties, KPMG states that having received no response to their questions and having completed their own independent assessment, KPMG had concluded that the omissions in the annual and interim financial statements of TNG were "*material*" to the Financial Statements. KPMG also noted that the additional information obtained by KPMG reflects "*that the management of* [the Stati parties] *made misrepresentations to KPMG Audit LLC*". KPMG concludes by stating:

> "*We are therefore writing to inform you that you should immediately take all necessary steps to prevent any further, or future, reliance on the following audit reports issued by KPMG Audit LLC*".

(iv) In a letter dated 6 September 2019 from Mr Stati to KPMG, Mr Stati requested KPMG to withdraw their letter invalidating their audit opinions.

(v) In a letter dated 20 September 2019 from KPMG to Mr Stati, KPMG noted again that there had been no response to their previous questions and that to date their "*questions raised remain conspicuously unaddressed*" in the most recent correspondence received back from the Stati Parties.[169] KPMG noted that the identification of Perkwood as a related party is "*in conflict with multiple representation letters signed inter alia by Mr. Stati*".[170] As a consequence, KPMG confirms for the second time that the audit reports must not be relied upon, stating "*In the absence of any evidence to the contrary – which to date Mr. Stati has failed to provide – there is no justification for a change in KPMG's position.*"

6.13 As can be seen from the above correspondence between KPMG and the Stati Parties, it appears that KPMG became aware, subsequent to the dates of its audit opinions, that the financial statements of KPM and TNG were materially misstated as a result of the failure to disclose the transactions with Perkwood as related party transactions (and, indeed, that management had failed to disclose Perkwood as a related party in its representations to KPMG). As a result, KPMG "withdrew" its audit opinions in respect of the 2007 to 2009 financial statements of KPM and TNG.

[169] KPMG / Stati Party correspondence, letter dated 20 September 2019, Exhibit PwC-067.

[170] KPMG / Stati Party correspondence, letter dated 20 September 2019, Exhibit PwC-067.

6.14 As noted above, Section 4.12 of the 2006 Indenture required certain procedures to be followed if Tristan, KPM and / or TNG were to enter into a related party transaction. Given the size of the transactions between Perkwood and TNG, under Section 4.12 of the 2006 Indenture it appears that there would have been a requirement for Tristan to deliver to the Trustee (i.e. Wells Fargo) "*an opinion as to the fairness to* [Tristan] *or* [KPM or TNG] *of such Affiliate Transaction from a financial point of view issued by an accounting, appraisal or investment banking firm of national standing*[.]"

6.15 I have not been provided with copies of the correspondence, if any, provided by Tristan (and / or the Stati Parties) to the Noteholders and / or the Trustee under the requirements of Section 4.12 of the 2006 Indenture. However, to the extent that, consistent with TNG's and KPM's financial statements, any such correspondence did not disclose the related party transactions with Perkwood, then the Stati Parties would have misrepresented to the Tristan Noteholders.

6.16 Further, Section 4.03 of the 2006 Indenture required KPM and TNG to produce stand-alone and combined financial statements with Tristan on a quarterly and annual basis. Assuming that these KPM and TNG stand-alone financial statements are the same as those audited by KPMG, then they would also have been materially misstated, given the incomplete disclosure around the related party transactions.

6.17 Similarly, Section 4.04(a) of the 2006 Indenture required Tristan, KPM and TNG to deliver to the Trustee, i.e. Wells Fargo, within ninety days after the end of each fiscal year, an Officers' Certificate stating that a review of the activities of Tristan and its subsidiaries had been made "*with a view to determining whether* [Tristan] *has kept, observed, performed and fulfilled its obligations*" under the 2006 Indenture, and stating that, for each Officer signing the certificate, "*to the best of his or her knowledge* [Tristan] *has kept, observed, performed and fulfilled each and every covenant*" of the 2006 Indenture and "*is not in default in the performance or observance of any of the terms, provisions and conditions*" of the 2006 Indenture. Again, in the absence of disclosure of the related party transactions referred to above, any such statements / certification would have been inaccurate.

6.18 The same applies to the reporting by Tristan under Section 4.04(b) of the 2006 Indenture which required that the year-end financial statements delivered pursuant to Section 4.03 be accompanied by a written statement of Tristan's independent public accountants that "*in making the examination necessary for certification of such financial statements, nothing has come to their attention that would lead them to believe that* [Tristan] *has violated any of the provisions of Article 4 or Article 5 hereof, or if any such violation has occurred, specifying the nature and period of existence thereof*", including, *inter alia*, Section 4.12's restrictions on transactions with Affiliates. Again, I have not seen copies of any such written statements from Tristan's independent public accountants but if, in making such statements, the independent public accountants of Tristan relied on the financial statements audited and subsequently withdrawn by KPMG then such statements are likely to have been based on incorrect information and, as a result, could themselves have been incorrect.

6.19 As set out in the sub-section below, in order to verify the claims by KPMG that material related parties transactions were not disclosed in KPM's and TNG's financial statements, I have undertaken my own review to assess whether KPM's and TNG's financial statements failed to disclose related party transactions.

My review of non-disclosed related party transactions

6.20 As explained in Section 4, I have undertaken a review of KPM's and TNG's accounting records to identify the recorded value of various related party transactions. For the purpose of this section of my report, I have then cross-checked these related party transaction amounts to the related party disclosures in KPM's and TNG's financial statements to assess the completeness of these disclosures. My detailed workings are set out in Appendix 6.1 of this report and are summarised in Tables 6.1 (for KPM) and 6.2 (for TNG) below.[171]

Table 6.1: Summary of non-disclosed related party transactions – KPM's financial statements (USD millions)

	2007	2008	2009	Total
Capitalised expense: Casco LLP	38.8	2.5	1.4	**42.7**
Capitalised expense: Ascom SA	1.4	-	-	**1.4**
Other	0.2	-	-	**0.2**
TOTAL	**40.4**	**2.5**	**1.4**	**44.3**

[171] As shown in Appendix 6.1, I have identified a number of related party sales, which also do not appear to have been disclosed as related party transactions. However, for the purposes of this report, my analysis focuses on the non-disclosed related party purchases which I have identified, as these form the largest element of the value of non-disclosed related party transactions that I have identified during the course of my review.

Source: Appendix 6.1.

Table 6.2: Summary of non-disclosed related party transactions – TNG's financial statements (USD millions)

	2007	2008	2009	Total
Capitalised expense: Perkwood Investment LTD	97.8	39.7	0.7	**138.1**
Capitalised expense: Ascom SA	8.1	-	-	**8.1**
Capitalised expense: Azalija LLP	1. 2	0.06	-	**1.2**
Capitalised expense: Arpega Trading S.R.L.	0.4	0.1	-	**0.5**
Capitalised expense: Casco-Petrostar LLP	0.8	-	-	**0.8**
Capitalised expense: GAST GEOPHYSICAL Ltd	-	0.05	-	**0.05**
Capitalised expense: Casco LLP	(0.1)	(0.4)	(5.4)	**(5.9)**
Undisclosed petty cash payment to Gabriel Stati	0.015	-	-	**0.015**
TOTAL	**108.1**	**39.5**	**(4.7)**	**142.9**

Source: Appendix 6.1.

6.21 As can be seen from the tables above, in addition to the non-disclosed related party transactions with Perkwood in TNG's financial statements, my review of KPM's and TNG's underlying accounting records has identified a number of other transactions with related parties which were not disclosed as related party transactions in KPM's and TNG's financial statements. In total, I have identified USD 187.2 million of related party transactions which were recorded in KPM's and TNG's underlying accounting records, but were not disclosed as related party transactions in the corresponding audited financial statements. My analysis confirms KPMG's conclusion that significant related party transactions were not disclosed in the financial statements.

Conclusion

6.22 My review has identified a significant number of related party transactions for which I have been unable to establish the commercial basis. Given the scale of these transactions and my subsequent reviews to then compare them to the corresponding third party transactions, it would appear that the related party transactions undertaken by TNG and KPM were not at arm's length. As explained in Section 3, it was a requirement of the 2006 Indenture that transactions valued at over USD 1 million with related parties should be at arm's length. On this basis, and in the absence of further information to justify or explain the rationale for the significant mark-ups that appear to have been charged by related parties, these related party transactions do not appear to have been undertaken in accordance with the requirements of the 2006 Indenture.

6.23 Further, my review of the KPMG Correspondence and my own analysis of TNG's and KPM's financial statements highlights that there are over USD 150 million of related party transactions between 2007 and 2009 which were not disclosed as related party transactions in TNG's and KPM's audited financial statements. Whilst I have not seen the noteholder reporting that the Stati Parties were required to prepare under the 2006 Indenture, I note that it was required to include quarterly and annual financial statements. To the extent that such documents, prepared in accordance with the requirements of the 2006 Indenture, also failed to disclose the related party transactions that I have identified in this report, then those statements too would be inaccurate.

7. Expert's Declaration

7.1 I understand that my overriding duty is to assist the court in matters within my expertise, and that this duty overrides any obligation to those instructing me or their clients. I confirm that I have complied with that duty and will continue to do so.

7.2 Except as disclosed in this report I have no conflict of interest of any kind.

7.3 I have included in my report those matters, of which I have knowledge or of which I have been made aware, that might adversely affect the validity of my opinion.

7.4 I have indicated the sources of all information I have used.

7.5 I have not without forming an independent view included or excluded anything which has been suggested to me by others (including my instructing lawyers).

7.6 I will notify those instructing me immediately and confirm in writing if for any reason my existing report requires correction or qualification.

7.7 I understand that:

a. my report, subject to any corrections before swearing as to its correctness, will form the evidence to be given under oath or affirmation; and
b. I may be cross-examined on my report.

7.8 I confirm that I have not entered into any arrangement where the amount or payment of my fees is in any way dependent on the outcome of the case.

7.9 I confirm that I have made clear which facts and matters referred to in this report are within my own knowledge and which are not. Those that are within my own knowledge I confirm to be true. The opinions I have expressed represent my true and complete professional opinions on the matters to which they refer.

Signature..... Date 29 July 2020